From: Kar Singh
To: Eric Pottenger
Subject: FW: 128-Herman water
Date: Monday, May 15, 2017 2:37:38 PM

I reached out to Tom Puckett and there is a waterline along Herman Road.

From: Tom Puckett [mailto:puckettt@swwater.org]
Sent: Monday, May 15, 2017 9:45 AM
To: Kar Singh
Subject: 128-Herman water

We have a 12" main along the north side of 128 that's about 35' from the edge of pavement, and an 8" main along the west side of Herman that's about 22' from the centerline.

Thanks,
Thomas Puckett, P.E., Design Engineer
Southwest Regional Water District
www.swwater.org
513-863-0828 (office)
513-896-3350 (direct)
513-428-9827 (mobile)

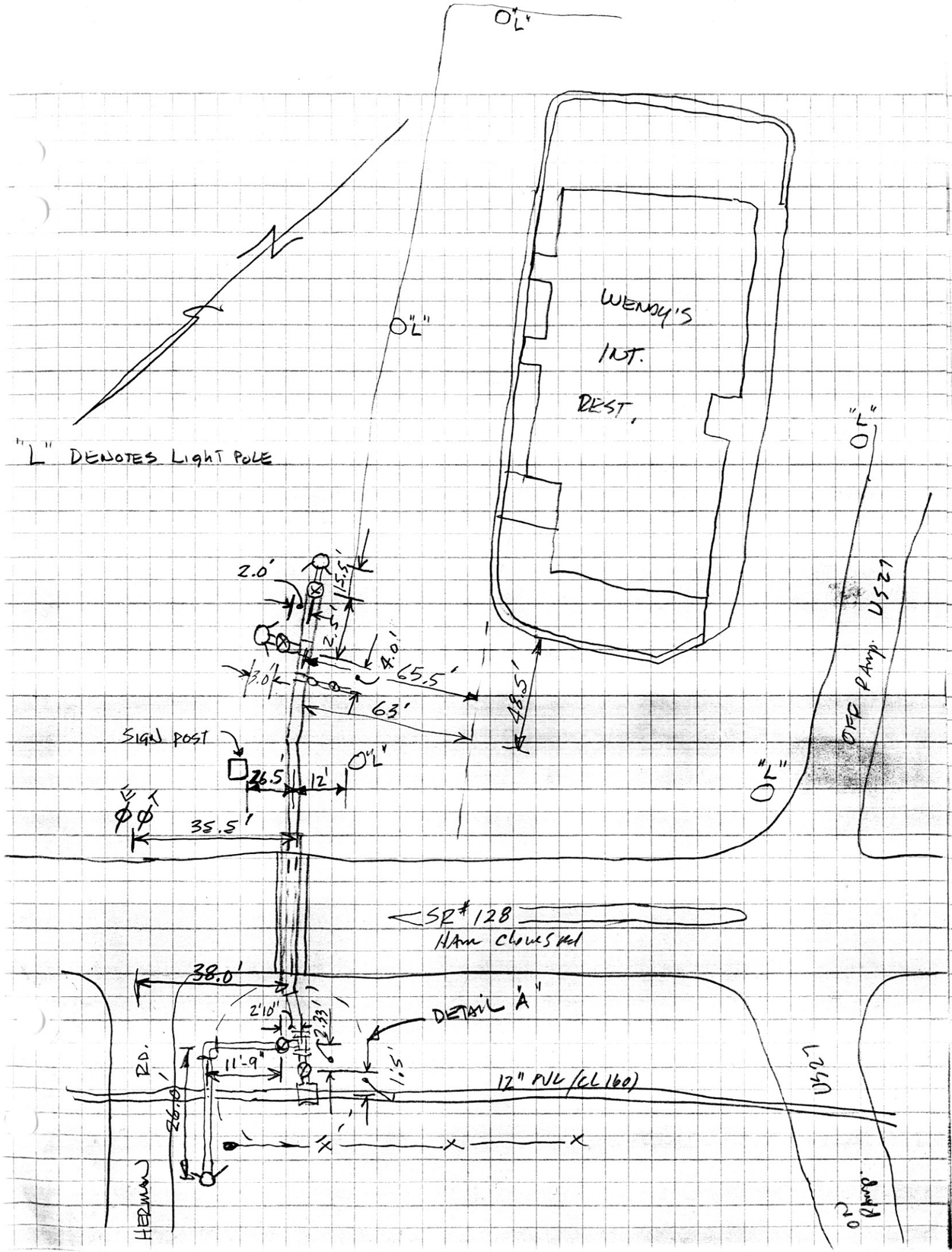
"L" DENOTES LIGHT POLE
WENDY'S
INT.
REST.
"L"
SIGN POST
2.0'
11.5'
4.0'
65.5'
63'
48.5'
26.5'
12'
35.5'
SR# 128
HAM CHOWSTAL
38.0'
2'10"
2.33'
DETAIL "A"
11'-9"
1.5'
12" PVC (CL 160)
26.0'
RD.
HERMAN
U.S. 27
OFF RAMP

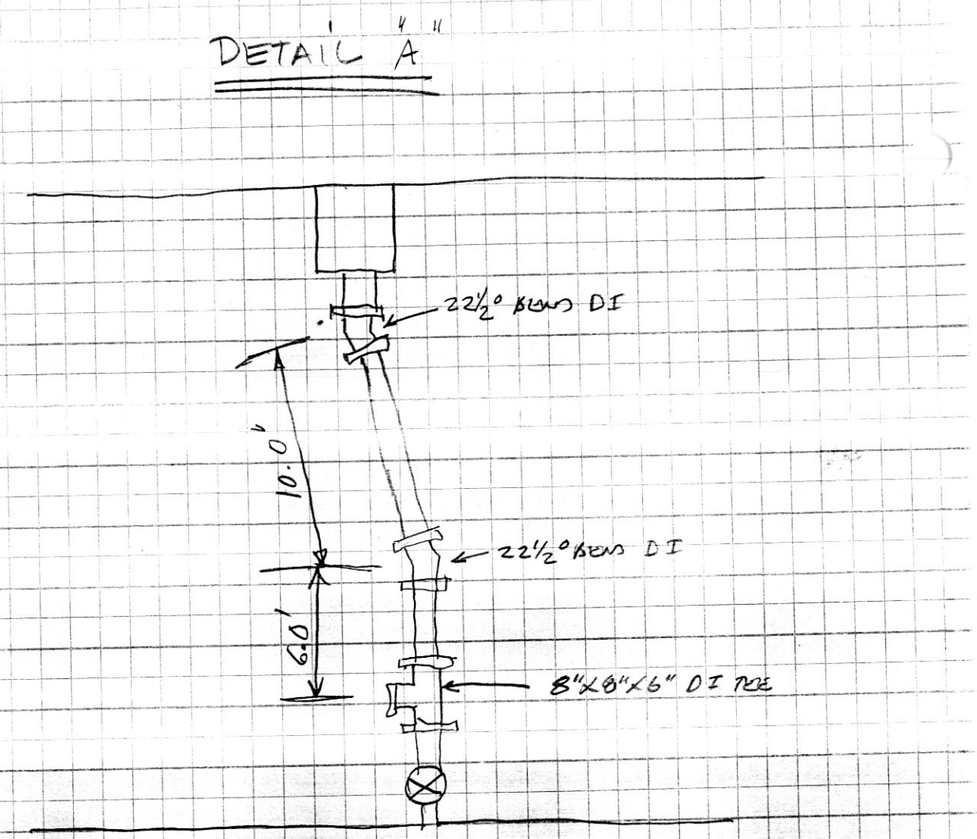
DETAIL "A"
22½° BEND DI
10.0'
22½° BEND DI
6.0'
8"X8"X6" DI TEE

ROSS
1990

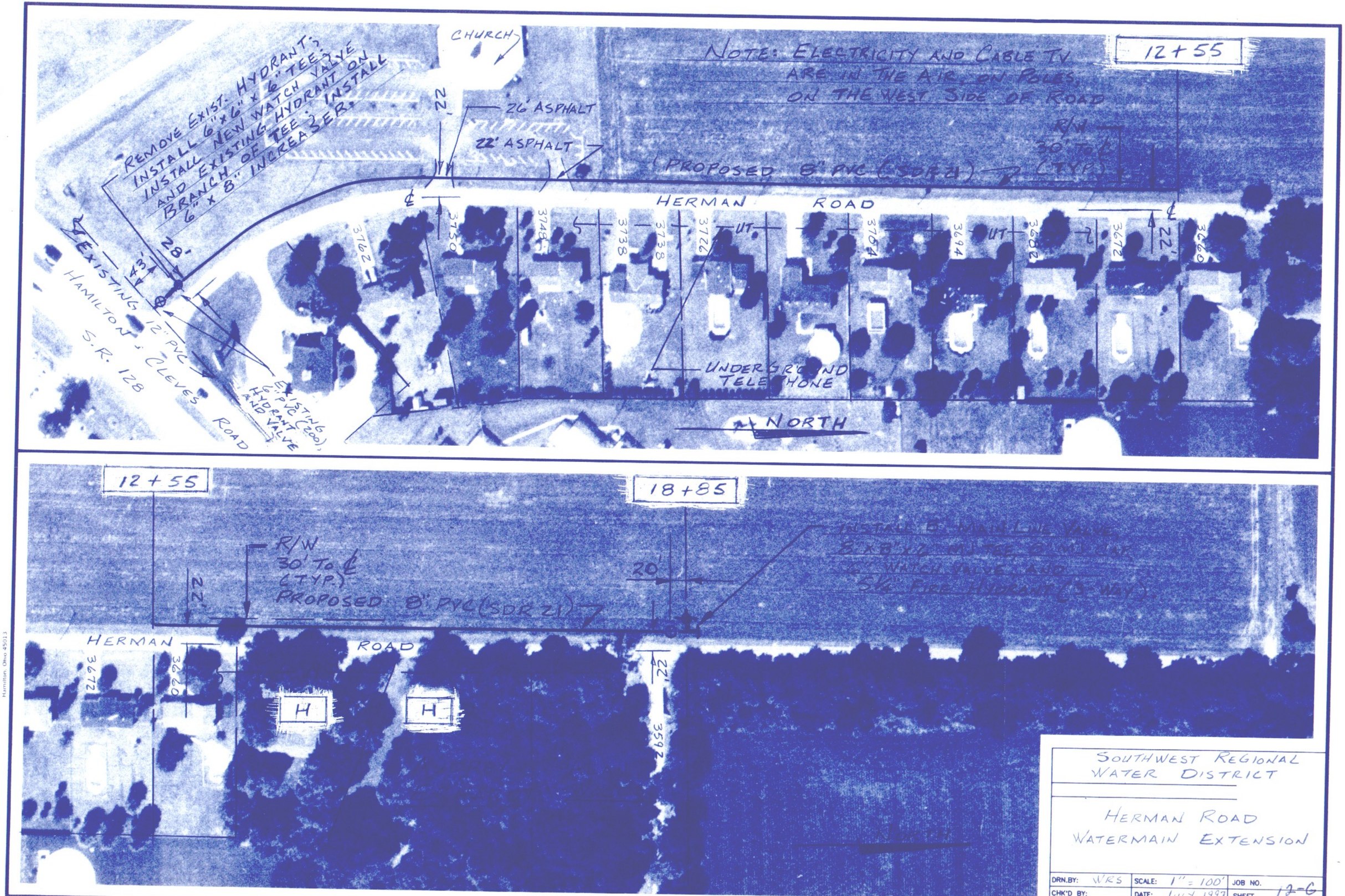

SOUTHWEST REGIONAL WATER DISTRICT

HERMAN ROAD WATERMAIN EXTENSION

DRN.BY: WRS	SCALE: 1" = 100'	JOB NO.
CHK'D BY:	DATE: JULY, 1997	SHEET 12-6 ~~6 OF 10~~
CERTIFIED BY:		

RYAN AERIAL SURVEYS Hamilton, Ohio 45013

61+00

70+00

ELEV. 572

KNEASE LN.

30+00

187+00

WADE MILL ROAD

U.S. 27

ELEV. 575

S.R. 128

12" PVC (CL 160)

Provide casing for water main

BORE & JACK UNDER U.S. 27 ON-RAMP

BORE & JACK UNDER U.S. 27 OFF-RAMP

WATER MAIN WITHIN 20" DIA. STEEL CASING PIPE INSTALLED BY OPEN-TRENCH CONSTRUCTION ALONG SHOULDER OF STATE HIGHWAY (SPECIAL BID ITEM)

ELDA SCHOOL

3980

4005

6" FIRE HYDRANT

87+00

90+00

100+00

N

This sheet revised in accordance with C.O. A1-1 8/6/91

DRAWN BY	J. LONG	CHECKED BY	JHM	SIECO, INC. CONSULTING ENGINEERS, ARCHITECTS, PLANNERS	THE WATER ASSOCIATION BUTLER COUNTY, OHIO HYDRAULIC STUDY IMMEDIATE IMPROVEMENTS	LINE 4	JOB Nº. 79149	SHT. 7
DATE	JAN. 1980	DATE				DIVISION: A-1	SCALE: 1"=200'	OF 25
		CERTIFIED BY	JHM					
		DATE						