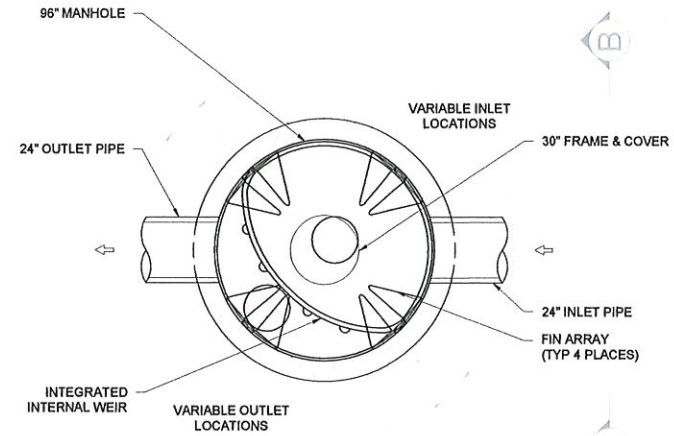

TYPICAL PLAN VIEW
NTS

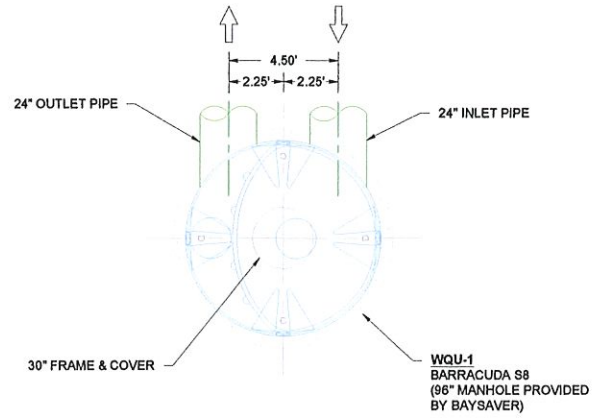

SITE SPECIFIC PLAN VIEW
NTS

BARRACUDA S8	
UNIT ID	WQU-1
PEAK FLOW RATE (CFS)	
TREATMENT FLOW RATE (CFS)	5.00*

* TREATMENT FLOW RATE PER NJDEP

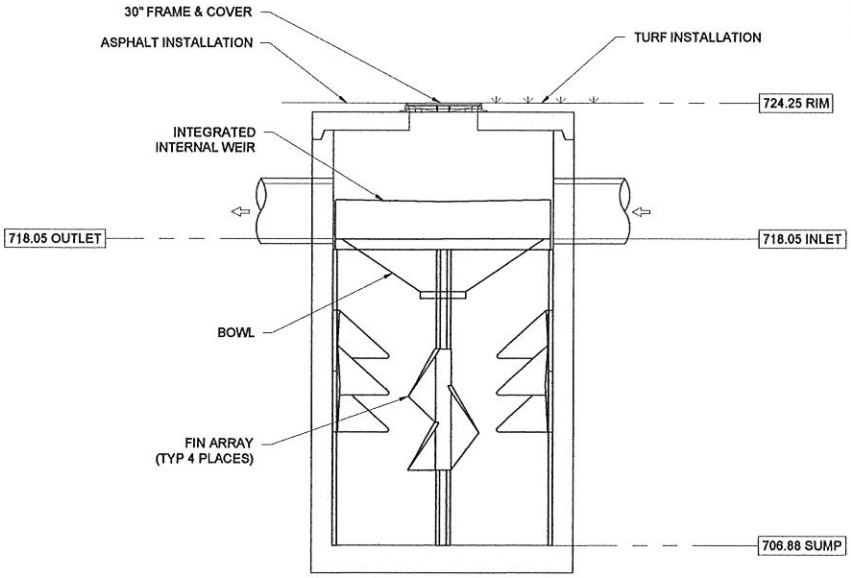

SECTION VIEW A-A
NTS

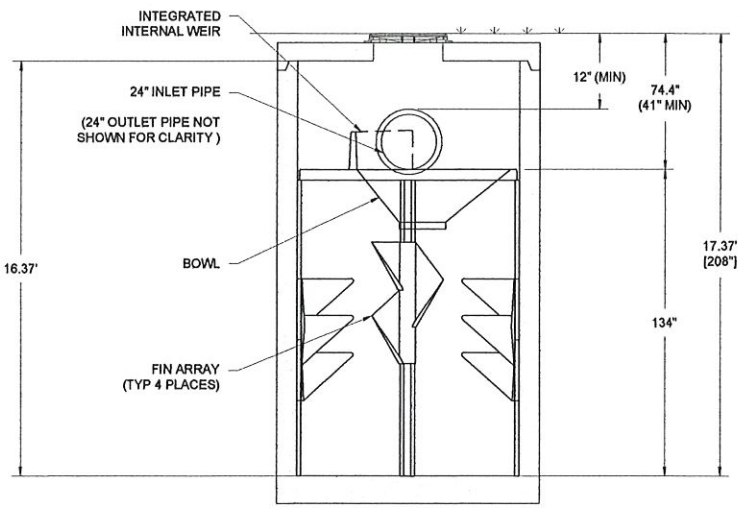

SECTION VIEW B-B
NTS

IMPROVEMENTS TO LIBERTY FAIRFIELD ROAD
PRINCETON, OH

DATE: 6-5-2019 DRAWN: NSL
PROJECT #: S126096 CHECKED: CJD

DATE	DRWN	CHKD	DESCRIPTION

1030 Deer Hollow Drive
Mount Airy, MD 21771
Barracuda
1-800-BAYSAVER
1-800-229-7283

4640 TRUEMAN BLVD
HILLIARD, OH 43026
ADS ADVANCED DRAINAGE SYSTEMS, INC.

NOT TO SCALE

THIS DRAWING HAS BEEN PREPARED BASED ON INFORMATION PROVIDED TO ADS UNDER THE DIRECTION OF THE SITE DESIGN ENGINEER OR OTHER PROJECT REPRESENTATIVE. THE SITE DESIGN ENGINEER SHALL REVIEW THIS DRAWING PRIOR TO CONSTRUCTION. IT IS THE ULTIMATE RESPONSIBILITY OF THE SITE DESIGN ENGINEER TO ENSURE THAT THE PRODUCT(S) DEPICTED AND ALL ASSOCIATED DETAILS MEET ALL APPLICABLE LAWS, REGULATIONS, AND PROJECT REQUIREMENTS.