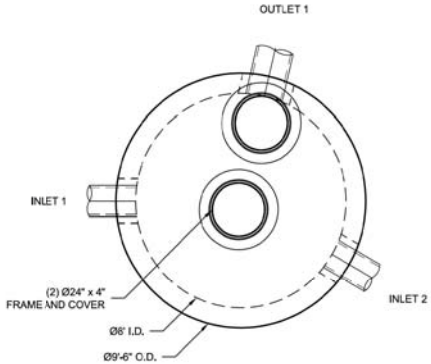

PLAN VIEW

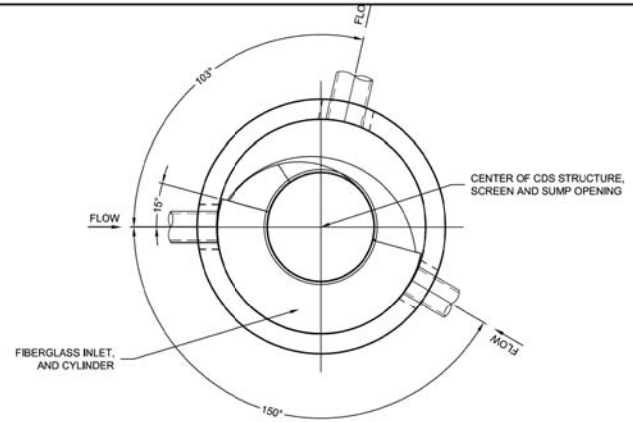

SECTION A-A

MATERIAL LIST (PROVIDED BY CONTECH)

COUNT	DESCRIPTION	INSTALLED BY
1	FIBERGLASS INLET AND CYLINDER	CONTECH
1	2400 micron, 4' O.D. x 3.04' SEP. SCREEN	CONTECH
1	SEALANT FOR JOINTS (BY PRECASTER)	CONTRACTOR
2	Ø24" x 4" FRAME & COVER, EJ#41600389, OR EQUIV.	CONTRACTOR

SITE DESIGN DATA

WATER QUALITY FLOW RATE	2.34 CFS

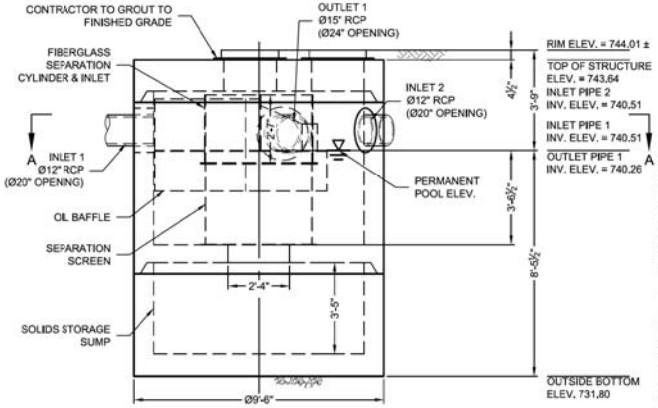

ELEVATION VIEW

GENERAL NOTES
1. CONTECH TO PROVIDE ALL MATERIALS UNLESS NOTED OTHERWISE.
2. FOR FABRICATION DRAWINGS WITH DETAILED STRUCTURE DIMENSIONS AND WEIGHT, PLEASE CONTACT YOUR CONTECH ENGINEERED SOLUTIONS LLC REPRESENTATIVE. www.ContechES.com
3. CDS WATER QUALITY STRUCTURE SHALL BE IN ACCORDANCE WITH ALL DESIGN DATA AND INFORMATION CONTAINED IN THIS DRAWING. CONTRACTOR TO CONFIRM STRUCTURE MEETS REQUIREMENTS OF PROJECT.
4. STRUCTURE SHALL MEET AASHTO HS-20 LOAD RATING, ASSUMING EARTH COVER OF 0' - 2', AND GROUNDWATER ELEVATION AT, OR BELOW, THE OUTLET PIPE INVERT ELEVATION. ENGINEER OF RECORD TO CONFIRM ACTUAL GROUNDWATER ELEVATION. CASTINGS SHALL MEET AASHTO M306 AND BE CAST WITH THE CONTECH LOGO.
5. IF REQUIRED, PVC HYDRAULIC SHEAR PLATE IS PLACED ON SHELF AT BOTTOM OF SCREEN CYLINDER. REMOVE AND REPLACE AS NECESSARY DURING MAINTENANCE CLEANING.
6. CDS STRUCTURE SHALL BE PRECAST CONCRETE CONFORMING TO ASTM C-478 AND AASHTO LOAD FACTOR DESIGN METHOD.

INSTALLATION NOTES
A. ANY SUB-BASE, BACKFILL DEPTH, AND/OR ANTI-FLOTATION PROVISIONS ARE SITE-SPECIFIC DESIGN CONSIDERATIONS AND SHALL BE SPECIFIED BY ENGINEER OF RECORD.
B. CONTRACTOR TO PROVIDE EQUIPMENT WITH SUFFICIENT LIFTING AND REACH CAPACITY TO LIFT AND SET THE CDS MANHOLE STRUCTURE.
C. CONTRACTOR TO INSTALL JOINT SEALANT BETWEEN ALL STRUCTURE SECTIONS AND ASSEMBLE STRUCTURE.
D. CONTRACTOR TO PROVIDE, INSTALL, AND GROUT INLET AND OUTLET PIPE(S). MATCH PIPE INVERTS WITH ELEVATIONS SHOWN. ALL PIPE CENTERLINES TO MATCH PIPE OPENING CENTERLINES.
E. CONTRACTOR TO TAKE APPROPRIATE MEASURES TO ASSURE UNIT IS WATER TIGHT, HOLDING WATER TO FLOWLINE INVERT MINIMUM. IT IS SUGGESTED THAT ALL JOINTS BELOW PIPE INVERTS ARE GROUTED.

STRUCTURE WEIGHT
APPROXIMATE HEAVIEST PICK = 25500 LBS.
STRUCTURE IS DELIVERED IN 3 PIECES

MAX FOOTPRINT = Ø9'-6"

CONTECH
PROPOSAL
DRAWING

NCI
LAYOUT 1A
4030-8-FGIS
5824 / NORW10

MARK	DATE	REVISION DESCRIPTION	BY

CDS4030-8-C - 613217-10
GILMORE RD. AT HAMILTON MASON ROUNDABOUT - BUT-CR21-1.31
HAMILTON, OH
for SYSTEM: CDS

CONTECH ENGINEERED SOLUTIONS LLC
www.ContechES.com
9025 Centre Pointe Drive, West Chester, OH 45069
800.338.1122 513.645.7000 513.645.7993 FAX

DATE: 02/22/19	SCALE: 1/4" = 1'-0"
DESIGNED: PWV	DRAWN: PWV
CHECKED: ###	APPROVED: ###
PROJECT No.: 613217	SEQUENCE No.: 10
SHEET: 1 OF 1	

CALCULATED GAU
CHECKED YSY

WATER QUALITY STRUCTURE DETAILS
GILMORE ROAD

BUT-CR21-1.31

50/50

S:\Design\Projects\Hammason\2101310\01310\admin\reviews\final tracings\Hamilton-Mason at Gilmore\150588\Design\Roadway\Sheets\150588_DD001.dgn 6/5/2019 2:39:17 PM miless