GRADING PLAN
100% BID/PERMIT ISSUE 1/27/17

STATE ROUTE 4
LIBERTY TOWNSHIP

CALCULATED JK
CHECKED TG

HORIZONTAL SCALE IN FEET
0 20 40

N

STATE OF OHIO
AUD. D201000

FOUND CROSS NOTCH (CONCRETE PILLAR)
0.29' E
0.18' S

FOUND IRON PIN
0.09' E
0.24' N

EX SAN MH
T=775.19
INV=765.99

S 62°35'37" W
87.82'

S 27°24'23" E
233.90'

PERMIT FROM O.D.O.T. REQUIRED FOR WORK IN THE RIGHT OF WAY

S 27°38'50" E
257.80'

APPROX. LOCATION 8" STORM

4:1 SLOPE

#107
NEW HW
FULL HW
(HW-3 TYPE B)
INV=767.75

#106
NEW CB
ODOT CB 2-5
T=774.40
(4) 6" WINDOWS @ 773.40
INV=768.00

12' WIDE EMERGENCY OVERFLOW WEIR

NEW RCP ROCK TYPE "C"
7'W x 20'L x 18"D

NEW PAVED CHANNEL
TYPE I-4
(REFER TO SHEET C4.1)

#300
NEW HW
HW-2.2
INV=771.80

#301
NEW CB
ODOT CB-3
T=793.50

3:1 SLOPE

#200
NEW HW
HW-2.2
INV=770.30

#201
NEW CB
ODOT CB-3MH
G=788.00

TYPE I-4
PAVED GUTTER
ODOT DM-2.1

EX 42" STORM
185' @ 0.09%

NEW RCP
NEW 42" Ø STORM
@ 1.0%

EX 8" SAN
29' @ 0.64%

EX SAN MH
T=776.36
INV=764.06

EX 8" SAN
T=775.19
INV=765.99

EX 42" STORM
T=775.50

N 62°35'37" E
61.01'

N 04°34'07" E
92.15'

N 43°55'48" E
45.54'

N 77°38'23" E
114.02'

511+00

512+00

510+00

CENTERLINE OF CONSTRUCTION

NEW RCP ROCK TYPE "C"
7'W x 20'L x 18"D

NEW 4" UNDERDRAIN @ 1%

SAWCUT
#109
STA 509+85.9, 72.9' LT
NEW HW
HW-2.2
INV=776.15

NEW 4" UNDERDRAIN CROSS SECTIONS C8

NEW 4" UNDERDRAIN (DAYLIGHT INTO DITCH)

#100
NEW HW
HW-2.20
INV=769.50

#219
NEW CB
ODOT CB-3
T=787.30

50' - 8" PERFORATED PIPE

3" WIDE #2 AGGREGATE

6.0'

8'

3.8%

2.7%

Ø

GRAPHIC SCALE
20 0 10 20 60
1" = 20'

PROJECT BENCHMARK
FOUND IRON PIN IN MONUMENT BOX
AT SOUTHEAST CORNER OF SECTION 10
IRON PIN ELEVATION=793.32

PROPOSED CONDITIONS LEGEND

806 — INDICATES PROPOSED CONTOURS

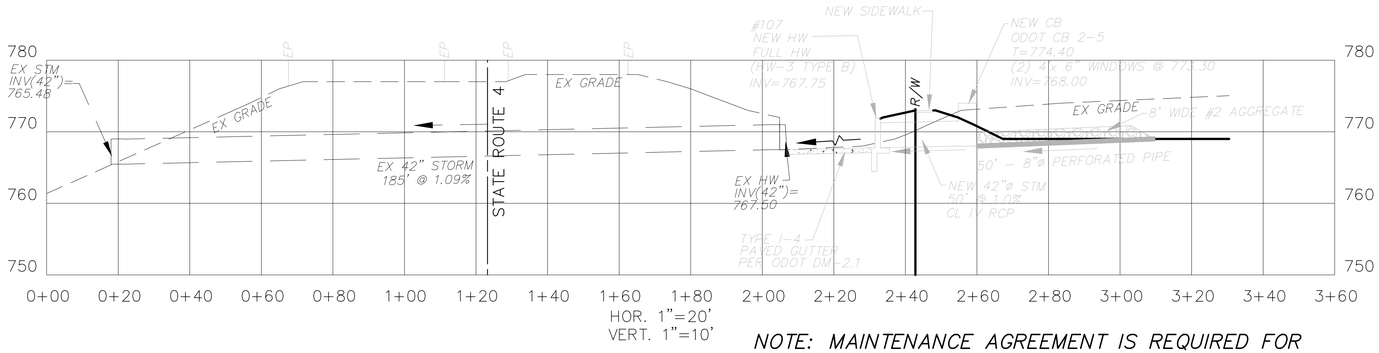
806.50 + INDICATES PROPOSED ASPHALT GRADES

INDICATES PROPOSED DRAINAGE FLOW ROUTE

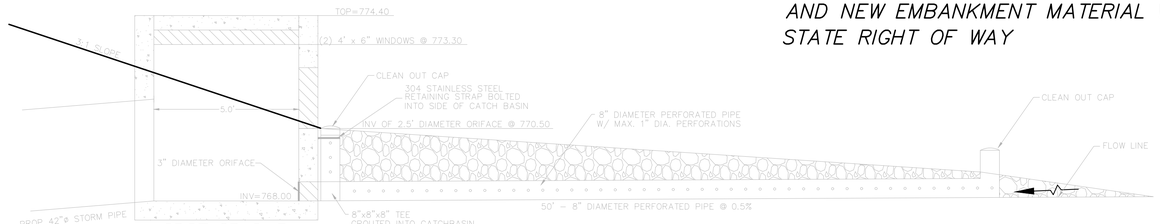
EXISTING CONDITIONS LEGEND

796 INDICATES EXISTING CONTOUR ELEVATIONS

16
18



NOTE: MAINTENANCE AGREEMENT IS REQUIRED FOR STORM STRUCTURE, ROCK CHANNEL PROTECTION, AND NEW EMBANKMENT MATERIAL WITHIN STATE RIGHT OF WAY

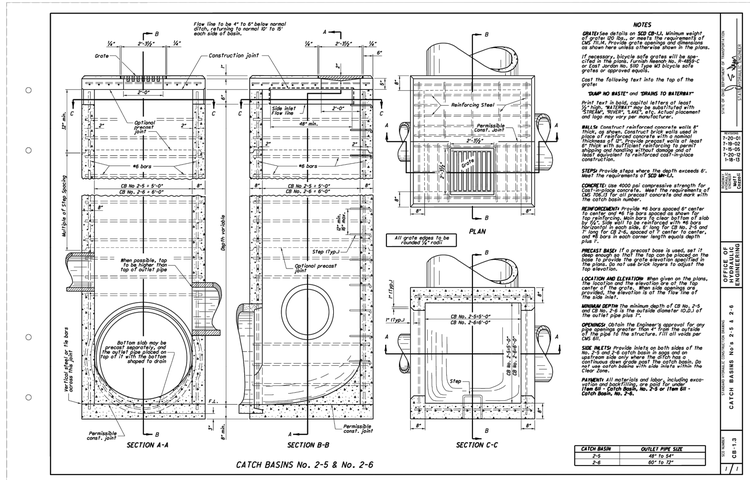


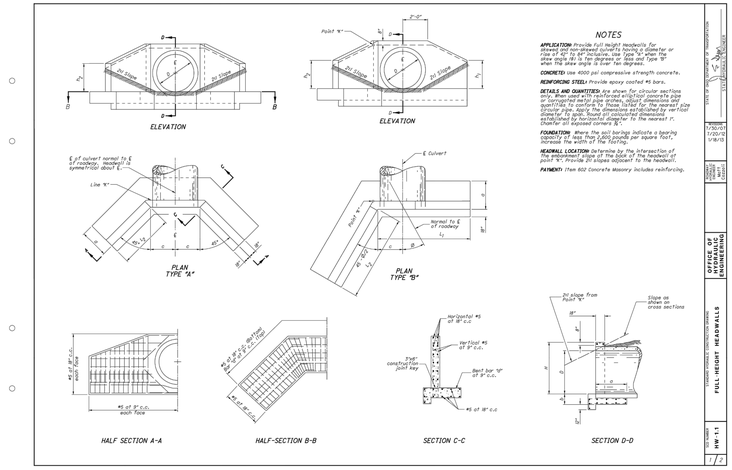
ODOT CB 2-5

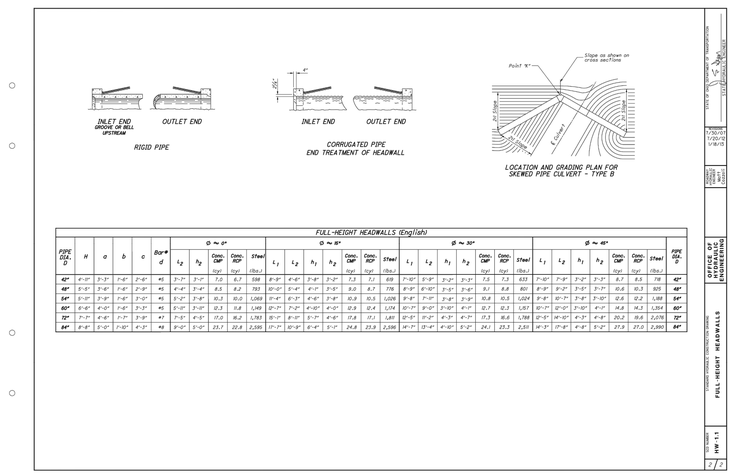
SECTION A – A

NOT TO SCALE

NOTE: THIS IS THE FINAL CONFIGURATION FOR THE STORM WATER QUALITY/DETENTION POND.
THIS STEP TO BE COMPLETED ONCE THE SITE IS STABILIZED AND THE SEDIMENT IS REMOVED FROM THE BASIN
SEE SHEET EC1.3 FOR THE CONFIGURATION OF THE OUTLET STRUCTURE FOR THE SEDIMENT CONTROL DURING CONSTRUCTION PHASE







FULL-HEIGHT HEADWALLS (English)

PIPE DIA. D	H	a	b	c	Bar # d	Ø ~ 0°				Ø ~ 15°					Ø ~ 30°					Ø ~ 45°					PIPE DIA. D
						L_2	h_2	Conc. CMP (cyd)	Conc. RCP (cyd)	Steel (lbs.)	L_1	L_2	h_1	h_2	Conc. CMP (cyd)	Conc. RCP (cyd)	Steel	L_1	L_2	h_1	h_2	Conc. CMP (cyd)	Conc. RCP (cyd)	Steel	L_1	L_2	h_1	h_2	Conc. CMP (cyd)	Conc. RCP (cyd)	Steel (lbs.)	
42"	4'-0"	3'-3"	7'-6"	3'-9"	#5	3'-7"	3'-7"	7.0	6.7	598	8'-9"	4'-6"	3'-8"	3'-3"	7.3	7.1	618	7'-10"	5'-3"	3'-7"	3'-3"	7.5	7.3	633	7'-10"	7'-3"	3'-3"	3'-3"	8.7	8.5	748	**42"**
48"	5'-0"	3'-6"	7'-6"	3'-9"	#5	4'-4"	3'-8"	8.5	8.2	733	10'-0"	5'-4"	4'-1"	3'-5"	8.0	8.7	776	8'-9"	6'-0"	3'-11"	3'-6"	8.3	801	8'-9"	7'-3"	3'-5"	3'-7"	10.6	10.3	925	**48"**
54"	5'-3"	3'-9"	7'-6"	3'-0"	#5	5'-2"	3'-8"	10.3	10.0	1,068	11'-4"	6'-3"	4'-6"	3'-8"	10.9	10.5	1,026	9'-8"	7'-0"	3'-9"	3'-9"	10.8	10.5	1,024	9'-8"	10'-7"	3'-8"	3'-10"	12.6	12.2	1,188	**54"**
60"	6'-0"	4'-0"	7'-6"	3'-3"	#5	5'-10"	3'-10"	12.3	11.8	1,149	12'-7"	7'-2"	4'-10"	4'-0"	12.8	12.4	1,174	10'-7"	8'-0"	3'-10"	4'-1"	12.7	12.3	1,157	10'-7"	12'-0"	3'-10"	4'-1"	14.8	14.3	1,354	**60"**
72"	7'-1"	4'-6"	7'-7"	3'-3"	#7	7'-3"	4'-3"	17.3	16.2	1,783	15'-1"	8'-3"	5'-7"	4'-6"	17.8	17.1	1,811	12'-5"	9'-2"	4'-3"	4'-7"	17.3	16.6	1,788	12'-5"	14'-0"	4'-3"	4'-8"	20.2	19.6	2,078	**72"**
84"	8'-0"	5'-0"	7'-10"	4'-3"	#8	9'-0"	5'-0"	23.1	22.6	2,586	17'-7"	10'-3"	6'-4"	5'-1"	24.8	23.8	2,586	14'-7"	10'-4"	4'-10"	5'-2"	24.1	23.3	2,551	14'-3"	17'-8"	4'-8"	5'-2"	27.8	27.0	2,980	**84"**

CALCULATED JK
CHECKED TG
HORIZONTAL SCALE IN FEET 0 20 40

DETAILS & NOTES
100% BID/PERMIT ISSUE 1/27/17

STATE ROUTE 4
LIBERTY TOWNSHIP