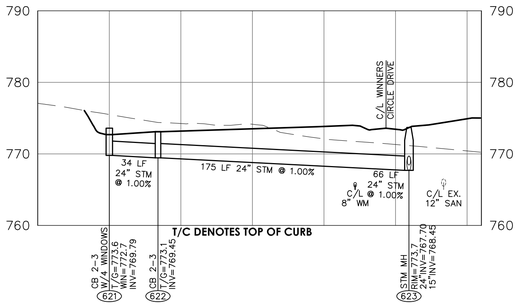

STORM SEWER 621 - 623

1"=50' HOR. / 1"=10' VERT.

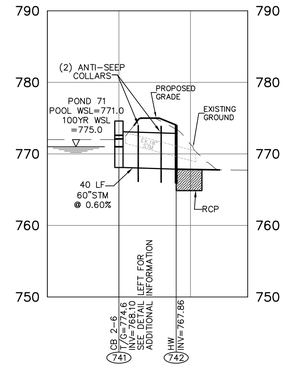

STORM SEWER 741 & 742

1"=50' HOR. / 1"=10' VERT.

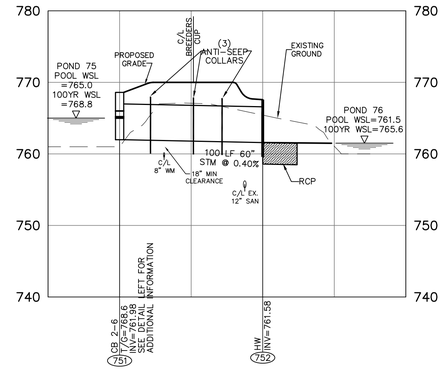

STORM SEWER 751 & 752

1"=50' HOR. / 1"=10' VERT.

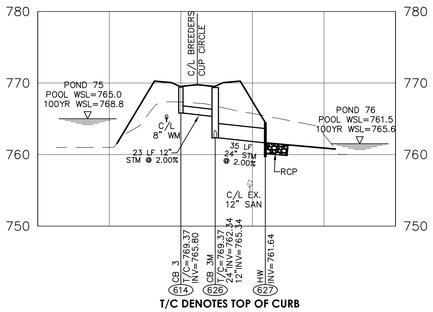

STORM SEWER 614 & 626-627

1"=50' HOR. / 1"=10' VERT.

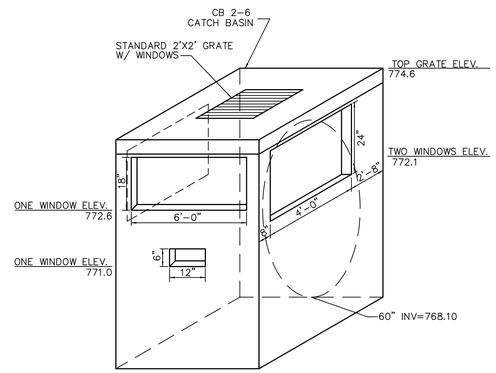

RETENTION/DETENTION POND 74
RELEASE STRUCTURE 741

NOT TO SCALE

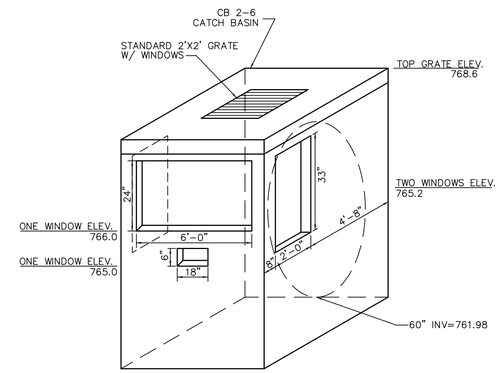

RETENTION/DETENTION POND 75
RELEASE STRUCTURE 751

NOT TO SCALE

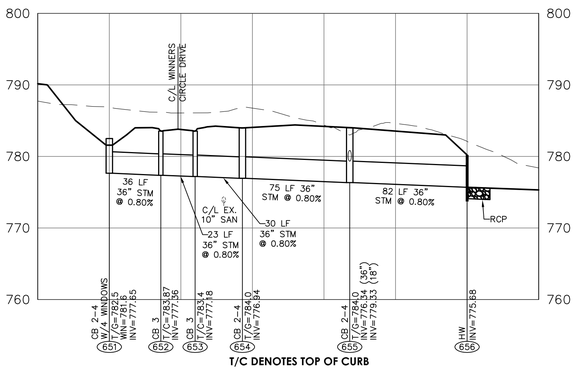

STORM SEWER 651-655

1"=50' HOR. / 1"=10' VERT.

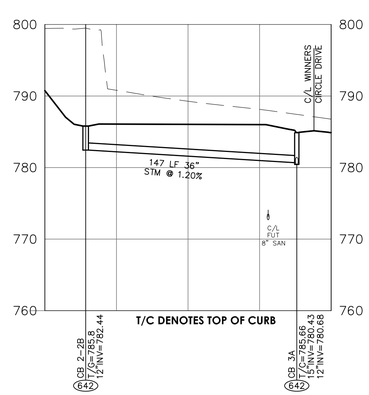

STORM SEWER 641-642

1"=50' HOR. / 1"=10' VERT.

UNDERGROUND UTILITIES

2 WORKING DAYS BEFORE YOU DIG

CALL...800-362-2764 (Toll Free)
OHIO UTILITIES PROTECTION SERVICE (OUPS)

CALL...800-925-0988 (Toll Free)
OHIO OIL & GAS PRODUCERS UNDERGROUND PROTECTION SERVICE (OGPUPS)

NON-MEMBERS MUST BE CALLED DIRECTLY

McGill Smith Punshon, Inc.
3700 Park 42 Drive • Suite 190B
Cincinnati, Ohio 45241-2097
Tel 513.759.0004 • Fax 513.563.7099
www.mcgillsmithpunshon.com
Engineers • Architects • Surveyors
Landscape Architects • Planners

Drawn By NAK Project Mgr. RA
Drawing File 04476064-IMP-00-SECTION 17
X-Reference Files 04476063-TOP-2014 MAY 14
Date 07/10/17

No.	Revision/Issue	By	Date
2	STORM SEWER & GRADING	RA	08/31/17

WINDING CREEK SECTION SEVENTEEN
AKA CARRIAGE HILL SECTION SEVENTEEN

SECTION 2, TOWN 2, RANGE 3
LIBERTY TOWNSHIP
BUTLER COUNTY, OHIO

Sheet Title
PROFILES & DETAILS

Project No. 04476.06
Scale 1"=50'
Sheet No. 6/10
File No. 04-476