CARAVEL

SECTION TWO

BLOCKS A & B

SECTION 22, TOWN 3, RANGE 3
LIBERTY TOWNSHIP, BUTLER COUNTY, OHIO
SEPTEMBER, 2023

INDEX TO SHEETS

Title Sheet	1
Plan & Profile Sheets	2–5
Profiles & Intersection Details	6
Drainage Structure Details	7
Grading Plan	8–9
Detail Sheets	10–12
Soil Erosion & Sedimentation Control Detail Sheet	13

LEGEND

EXISTING CONTOURS
PROPOSED CONTOURS
CENTERLINE
PROPERTY LINE
EXISTING SANITARY SEWER & MANHOLE
PROPOSED SANITARY SEWER & MANHOLE
EXISTING WATER MAIN
FIRE HYDRANT
WATER VALVE
PROPOSED WATER MAIN
EXISTING GAS MAIN
SUMP DRAIN LINE
EXISTING STORM PIPE & CATCH BASIN
STORM CATCH BASIN
STORM MANHOLE
PROPOSED STORM PIPE
EXISTING TELEPHONE
EXISTING CABLE
DIRECTION OF DRAINAGE
PROPOSED SWALE
LOT SWALE

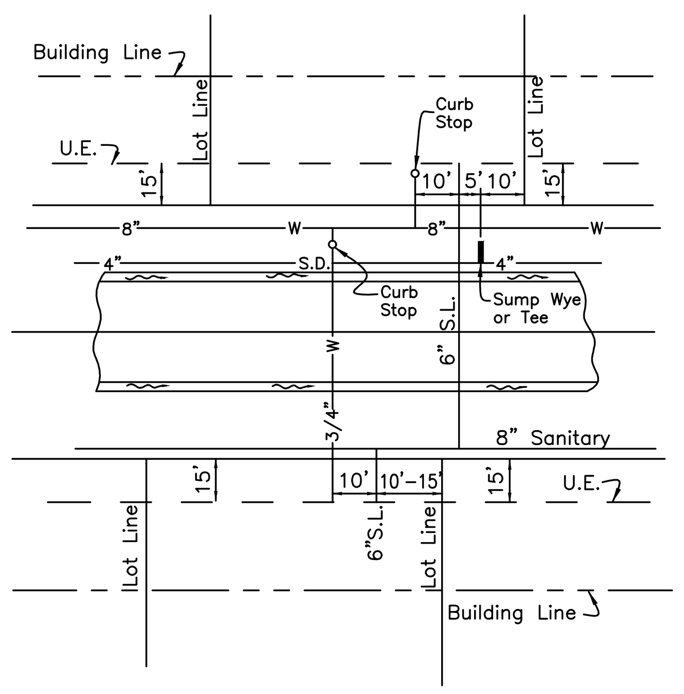

STANDARD SERVICE DETAIL

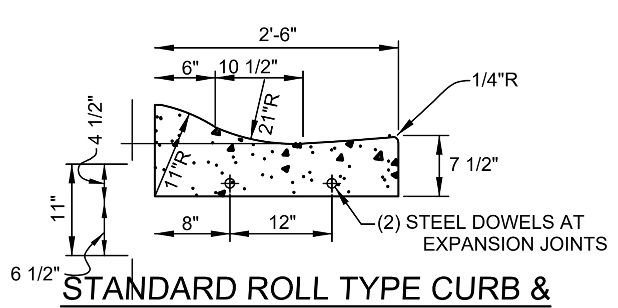

STANDARD ROLL TYPE CURB & GUTTER C-1

CURB RAMP SPECIFICATIONS

1. **Curb ramps shall be design A or design B per ODOT Drawing BP–7.1, sheets 1 through 3.**
2. **Truncated domes are to meet the specifications of ODOT drawing BP–7.1, sheet 3, and span the entire width of the sidewalk.**

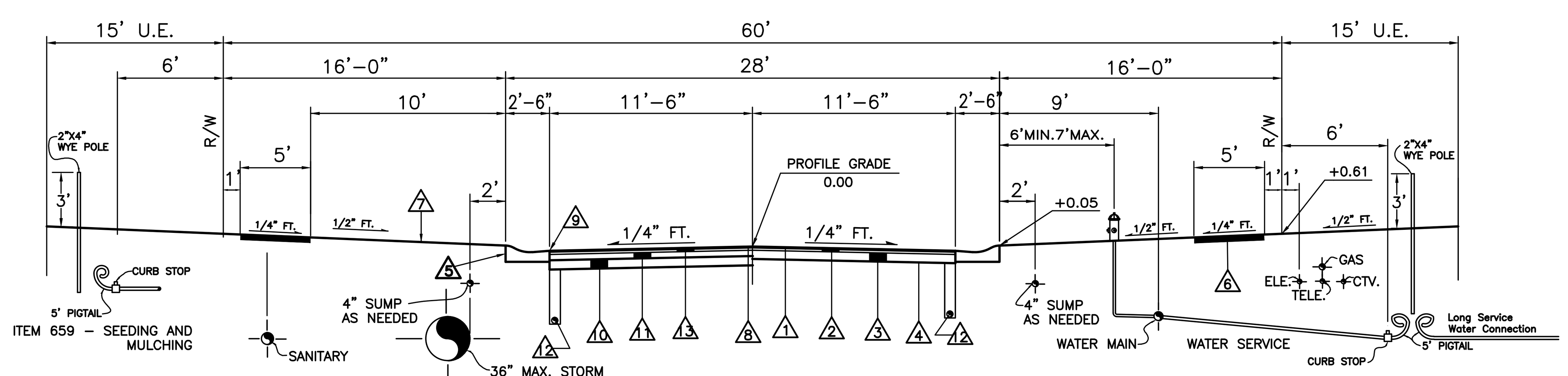

ITEM	DEPTH TOP OF PIPE
Underdrain	18"
Sumplines	24" – 30"
Gas	24" – 30"
Water	48" – 54"
Electric	36" – 40"
Telephone	36" – 40"
Cable TV	36" – 40"

*SURFACE COURSE (ITEM 448) AND TACK COAT (ITEM 407) ARE TO BE APPLIED NO SOONER THAN TWELVE (12) MONTHS AFTER THE LEVELING COURSE (ITEM 448), AND FIFTY (50) PERCENT OF THE HOMES ARE COMPLETED. IF AFTER TWO (2) YEARS FIFTY (50) PERCENT OF THE HOMES HAVE NOT BEEN COMPLETED, THEN THE TOP COURSE MAY BE APPLIED.

TYPICAL SECTION

1. 1" ITEM SURFACE COURSE – 448 ASPHALTIC CONCRETE SEE * NOTE
2. 2 1/2" LEVELING COURSE – ITEM 448 ASPHALTIC CONCRETE
3. 6" BASE COURSE – ITEM 301 BITUMINOUS AGGREGATE BASE
4. COMPACTED SUBGRADE – ITEM 204
5. ROLL TYPE CURB & GUTTER – ITEM 609 (BUTLER COUNTY STANDARD C–1)
6. FOUR INCH THICK CLASS "C" CONCRETE SIDEWALK, FIVE FEET WIDE ITEM 608 WALK TO BE 1/2" HIGHER THAN SOD.
7. SEEDING & MULCHING – ITEM 659
8. TACK COAT – ITEM 407 – TO BE APPLIED AT A RATE OF 0.05 GAL. PER SQUARE YARD, SEE * NOTE
9. TACK COAT – ITEM 407 – TO BE APPLIED TO FRONT FACE OF CURB PRIOR TO INSTALLATION OF 301 BITUMINOUS AGGREGATE BASE. ALSO TO BE APPLIED TO CURB JOINT AFTER THE INSTALLATION OF 448 LEVELING COURSE.
10. 6" BASE COURSE – ITEM 304 AGGREGATE BASE
11. 5" BASE COURSE – ITEM 301 BITUMINOUS AGGREGATE BASE
12. 4" UNDERDRAIN – ITEM 605. CONNECT UNDERDRAIN TO CENTERLINE OF CURB AND GUTTER. CONNECT TO SIDEWALL OF NEAREST CATCH BASIN
13. 1 1/2" LEVELING COURSE – ITEM 448 ASPHALTIC CONCRETE

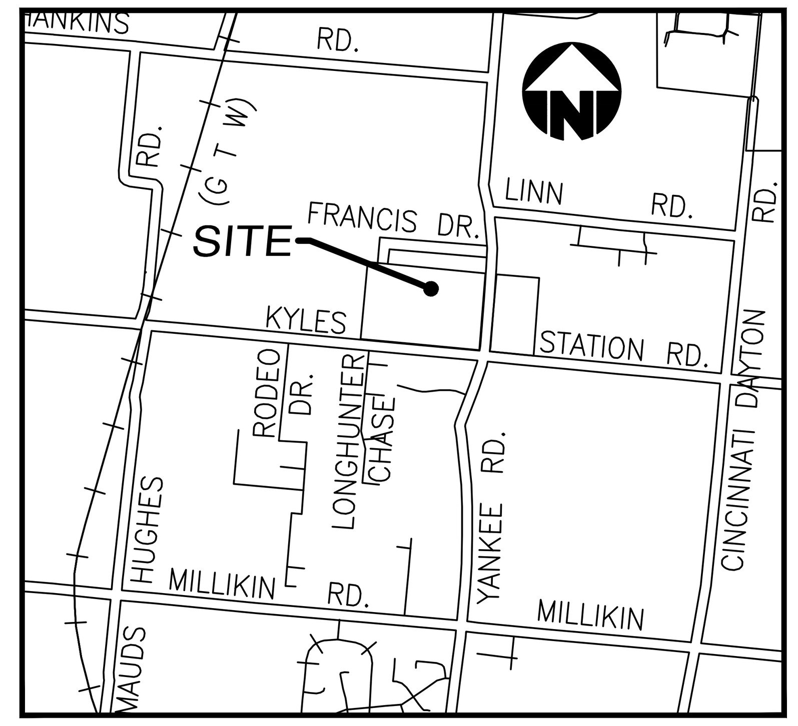

VICINITY MAP

NOT TO SCALE

OWNER & DEVELOPER

The Drees Company
211 Grandview Drive
Ft. Mitchell, KY 41017
(859) 578-4324

BENCHMARK

Traverse Point (Iron Pin)
in center of Kyles Station Road
and Yankee Road Roundabout
Elevation = 769.85

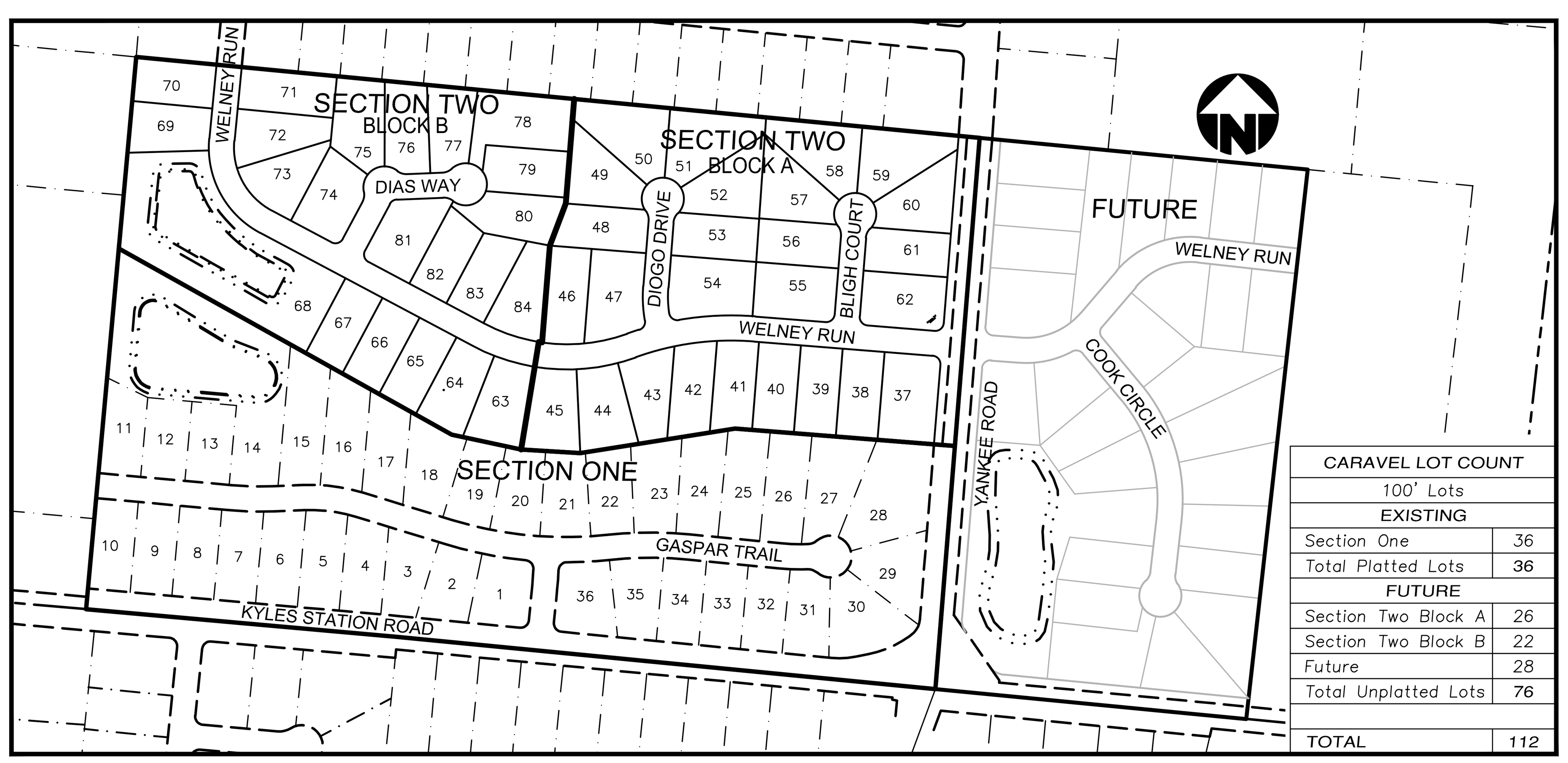

CARAVEL LOT COUNT	
100' Lots	
EXISTING	
Section One	36
Total Platted Lots	36
FUTURE	
Section Two Block A	26
Section Two Block B	22
Future	28
Total Unplatted Lots	76
TOTAL	112

DEVELOPMENT MAP

SCALE: 1"=300'

JOB LOG

DATE	COMMENT
5–17–23	Submitted to Butler County Planning
7–13–23	Resubmitted to BCWS
7–19–23	Resubmitted to BCEO

SUPPLEMENTAL PRINTS OF STANDARD CONSTRUCTION DRAWINGS	
C–1	
Std.MH–1A	
Std.HW–D	HW1.1 (O.D.O.T.)
CB–3	
CB–3(Mod.)	
CB–3A	
CB–3A(Mod.)	CB–2–4(O.D.O.T.)
CB–2–2–A(O.D.O.T.)	CB–2–3(O.D.O.T.)
CB–2–2–B(O.D.O.T.)	CB–2–5(O.D.O.T.)
Std.R–1	

CONSTRUCTION APPROVAL	Date
Butler Co. Water & Sewer Dept.	7–17–23
Butler Co. Engineer's Office	7–21–23
OEPA NPDES NOI # 1GC09399*AG	7–6–23

These plans are not for construction until ALL approval dates have been filled in.

BUTLER COUNTY ENGINEER'S OFFICE
STANDARD DETAIL FOR
ROADWAY PAVEMENT RESTORATION

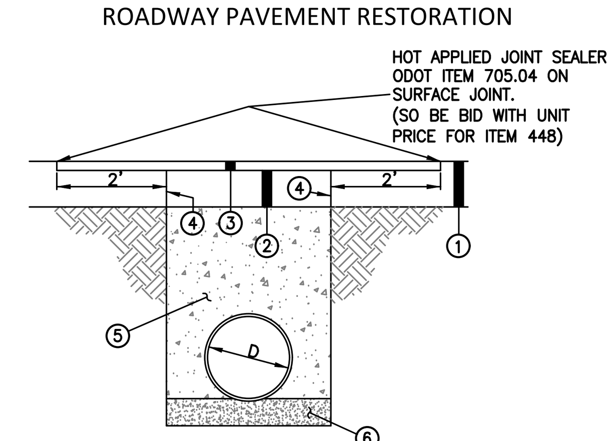

1. EXISTING PAVEMENT
2. 8" ITEM 301 BITUMINOUS AGGREGATE BASE IN TWO 4" LIFTS
3. 2" ITEM 448 ASPHALT CONCRETE SURFACE COURSE MIN. 2' EACH SIDE OF CUT
4. ITEM 407 TACK COAT APPLIED AT 0.10 GAL/SY
5. LOW STRENGTH MORTAR BACKFILL MATERIAL CLASS LSM 50
6. MIN. 6" GRANULAR PIPE BEDDING (OPTION – USE GRANULAR BEDDING EXTENDED 12" ABOVE PIPE FOR FULL WIDTH OF TRENCH)

SEQUENCE OF CONSTRUCTION

THE FOLLOWING SEQUENCE OF CONSTRUCTION WILL BE SIMULTANEOUSLY FOLLOWED FOR ALL AREAS ELIMINATING ONLY THOSE STEPS THAT DO NOT PERTAIN TO THAT PARTICULAR AREA:

STEP 1: INSTALL EROSION AND SEDIMENT CONTROL MEASURES

STEP 2: PERFORM CLEARING & GRUBBING OPERATION.

STEP 3: INSTALL SEDIMENT BASINS AND TEMPORARY SILT TRAPS WITHIN SEVEN (7) DAYS PRIOR TO STRIPPING AND STOCKPILING TOPSOIL AND/OR GRADING AND WITHIN SEVEN (7) DAYS OF GRUBBING.

STEP 4: ROUGH GRADE SITE, STABILIZE EROSION PRONE AREAS. ALL SLOPES 3 TO 1 AND GREATER SHALL BE IMMEDIATELY STABILIZED WITH SEED AND MULCH OR AN EQUAL.

STEP 5: INSTALL UTILITIES

STEP 6: INSTALL BASE COURSE IN ROADWAYS FOLLOWING THE INSTALLATION OF IMPROVEMENTS.

STEP 7: FINE GRADE AND SEED; REMOVE EROSION CONTROL METHODS UPON COMPLETION OF ALL IMPROVEMENTS.

GENERAL NOTES

1. Item numbers refer to the Ohio Department of Transportation construction and material specifications, and all construction work shall be done according to said specifications of Butler County requirements and standards for subdivisions. When in conflict, the County requirements shall prevail.

2. Items that pertain to underground utilities such as watermain pipe, sanitary sewer pipe, water valves and manhole frames and covers, etc., will remain under specifications of the utility serving the area. Storm sewers shall be designed and constructed in accordance with the requirements of the Butler County Engineer.

3. All trenches within the right–of–way and 10' utility easement shall be compacted and backfilled in accordance with item 203 and 611 in the state specifications.

4. Surface course (item 448) and tack coat (item 407) are to be applied no sooner than nine (9) months after the leveling course, (item 448), and fifty (50) percent of the homes are completed. If after two (2) years fifty (50) percent of the homes have not been completed, then the top course may be applied.

5. A minimum 10' utility easement shall be shown on the record plat parallel and immediately adjacent to the right–of–way line allowing for installation, operation and maintenance of sewers, water, electric and telephone conduits and any other public or quasi public utility.

6. Developer shall be responsible for the installation of conduits for the full width of the public right–of–way at a depth of 36" for use by the electric, telephone and cable services. The location of the lines shall be coordinated with utility companies by the developer.

7. All electrical transformers shall be located so that they do not interfere with the existing manholes or water main appurtenances.

8. Sump line conduits are to be SDR 35, Armco 2000, or equivalent.

9. WATER MAIN
A. Water main materials, valves, fire hydrants, fittings and appurtenances and installation to be as per Butler County specifications, using class 53 Ductile Iron as per AWWA C–151 with minimum 4' cover.

B. All water main valves to have a minimum depth of 2.5' and a maximum depth of 4' from proposed grade to the top of the Valve Operating Nut.

C. Minimum 10' horizontal, 18" vertical separation between water main and sanitary and/or storm sewer.

D. If meter pits cannot be initially installed at the location shown on the typical section, a curb stop can be set up at this location.

10. SANITARY SEWER
A. Sanitary sewer materials and installation to be as per Butler County specifications, using Section 3110 for PVC SDR–35 & 26 pipe; Section 3140 for ABS or PVC composite pipe; Section 3410 for manholes.

B. Crossings Whenever a sanitary sewer and water main must cross, the sewer shall be at such an elevation that the crown of the sewer is at least 18 inches measured between the outside pipe walls, below the bottom of the water main.
If it is absolutely impossible to maintain the 18 inch vertical separation, the water main shall be relocated or the sewer shall be constructed as follows:

1. A sewer passing over or under the water main shall be encased or constructed of materials that are equivalent to water main standards of construction for a minimum distance of 10 feet on each side of the water main.
2. The sewer crossing shall be constructed so that the sewer joints will be equidistant and as far as possible from the water main joints.
3. Where a water main passes under a sewer, adequate structural support shall be provided for the sewer to prevent damage to the water main.

C. Sanitary laterals shall be extended to at least ten (10) feet beyond the Property / Right–of–Way or to the edge of the easement, whichever is greater.

D. Sanitary sewer laterals, which shall include all pipe and appurtenances from the building to the public sewer main, and the connection to the public sewer main shall be considered private and the responsibility of the property owner to maintain. The connection to the sewer would be any piping that extends out from the main barrel of the sewer main.

E. All buildings to be served by the public sewer system shall be constructed so as to provide a minimum of four feet (4') of vertical separation between the public sanitary sewer, at the point of connection, and the lowest building level served by a gravity sewer connection and shall not exceed a depth of 12 feet below finish grade at the end of the lateral at the right–of–way unless specifically authorized by the County. In addition, said building level shall be at least one (1) foot above the lowest point of free–overflow (non–sealed manhole cover) upstream of any treatment facility of wastewater pumping facility that receives the discharge from said building. Said minimum service levels shall be recorded on the "As–built" plans for the development which will be kept on file in the office of the Butler County Department of Environmental Services.

11. Butler County Water and Sewer Department does not accept any responsibility for the relocation, repair, or replacement of any other utility installed within five (5) feet of the center line of any sanitary sewer main or water main.

12. Private driveways, parking lots and other paved areas, earthen berms or structures should not be constructed over private water or sewer service lines within the public road right of way or within the easement areas for public utilities. Should this occur, the property owner shall be held responsible for the protection and repair and for providing access to any curb stops, meter pits, manholes, clean–outs, etc. installed in conjunction with these private service lines and for any damage or restoration of the paved surfaces or structures that may result from the future operation, maintenance, repair or replacement of said service lines and appurtenances.

13. STORM SEWER
A. Storm sewer pipe shall meet the requirements as follows:
1. PVC pipe as per ODOT Specification 707.42 for all diameters
2. HDPE pipe as per ODOT Specification 707.33
3. Corrugated steel pipe as per ODOT Specification 707.01 or 707.02 for all diameters
4. Reinforced concrete pipe as per ODOT Construction and Material Specification 706.02 for all diameters. Class shall be specified at the contractor's request. (Cincinnati Concrete Pipe, Duracrete or equal).
5. Bituminous coated corrugated steel pipe as per ODOT Specification 707.05 or 707.07

Installation shall meet Butler County Specifications. All joints shall be soil seal joints unless specifically noted on the plans.

B. Deflection Testing for Storm Sewers and Culverts 15% of all storm sewers shall be tested for deflection within thirty days after they are complete. Butler County Engineer or his designated representative will determine what 15% shall be tested. If any storm sewer in the original 15% is found out of compliance, deflection tests will be required on 100% of the remaining storm sewer. A vertical ring deflection greater than 5% will not be allowed. This deflection is defined as 5% reduction in the vertical base or average inside diameter. The mTACod of testing shall be subject to the approval of the engineer. If rigid balls or mandrels are used to test pipe deflection, no mechanical pulling devices shall be used. The deflection test may be conducted with a nine prong mandrel, a ball or a cylinder or another manner acceptable to the Butler County Engineer or his designated representative. The testing will be accomplished from manhole to manhole or catchbasin to catchbasin, following the complete flushing of the line. The contractor shall furnish all equipment required to complete the deflection testing. The deflection test shall be witnessed by the County Engineer or his designated representative. Any section of pipe that fails to meet the aforementioned requirements shall be rerounded by a procedure acceptable to the County or be excavated and either be relayed or replaced, and retested until the requirements are met.

C. All catch basins and manholes with a depth greater than 4' shall be provided with steps. Steps shall meet the requirements of ODOT STD. 604 and shall conform to the details as shown on Butler County Standard Drawing MH–1A.

D. Headwall: HW–4A to be used with Corrugated Metal pipe or HW–4B to be used with Concrete Pipe.

13. Roof drains, foundation drains, and other clean water connections to the sanitary sewer system are prohibited.

14. Any detention basin on site should be constructed prior to the clearing of topsoil and grading of the site. All trees and vegetation shall be removed from all proposed detention basins regardless of maintenance responsibility.

15. SEDIMENTATION CONTROL
The project has been designed to control erosion and prevent damage to other property. All stripping, earthwork, and regrading shall be performed to minimize erosion. Natural vegetation shall be retained wherever possible. The proposed plan will allow almost all eroded material to be retained on site.

All areas disturbed by the construction of the roadways, ditches and sediment basins shall be seeded and strawed as soon as possible to limit the erosion and stabilize the soil. Payment will be by the number of square yards disturbed as per the grading plan. For additional sedimentation control details, see grading plan.

16. Private driveways, parking lots and other paved areas, earthen berms or structures should not be constructed over private water or sewer service lines within the public road right of way or within the easement areas for the public utilities. Should this occur, the property owner shall be held responsible for the protection and repair and for providing access to any curb stops, meter pits, manholes, clean–outs, etc. installed in conjunction with these private service lines and for any damage or restoration of the paved surfaces or structures that may result from the future operation, maintenance, repair or replacement of said service lines and appurtenances.

17. Butler County will not be responsible for any pavement or storm sewer repairs resulting from water main and sanitary sewer repairs. Butler County also will not be responsible for adjusting manholes, valves, fire hydrants, meter pits, etc. as a result of grade changes. The grantor shall be responsible for proper adjustment of manholes, valves, fire hydrants, meter pits, etc. to the satisfaction of Butler County, due to grade changes, paving, repairing, etc. initiated by the grantor.

18. A typical five (5) foot drainage easement is to be provided on both sides of every lot line.

19. Any roadway settlement greater than one inch will be required to be repaired with Item 613 Low Strength Mortar Backfill (Type 1). See Detail on Sheet #10.

20. Provide the Butler County Engineer's Office with a forty–eight (48) hour notice prior to the start of any construction, including sanitary installation. Phone 785–2569 (Matt Homan).

21. Contractors to accept all Quantities as correct prior to beginning construction.

22. Contractor shall include the cost of County inspection and extension fees in unit price bid.

23. Contractor shall coordinate the disconnection and removal of all existing utility services to demolished house site with corresponding utility providers. Permits shall be required by Butler County Board of Health before any abandonment of existing septic systems or private water wells can take place.

24. Existing Zoning: R–1

Frontage:	100'
Lot Area:	20,000 s.f. (Min.)
Setbacks:	(Unless otherwise noted on plan)
Front	50'
Side	15'Min., 30'Total
Rear	45'

25. Total Acreage: 33.6505 Acres

26. Total # Lots: 48

811 Know what's below. Call before you dig.

THIS DOCUMENT AND ALL RELATED DETAIL DRAWINGS, SPECIFICATIONS, AND ELECTRONIC MEDIA PREPARED OR FURNISHED BY BAYER BECKER (BB), ARE INSTRUMENTS OF BB'S PROFESSIONAL SERVICE, AND IS THE EXCLUSIVE PROPERTY OF BB. NO DISCLOSURE, USE, REPRODUCTION, OR DUPLICATION IN WHOLE, OR IN PART, MAY BE MADE WITHOUT WRITTEN PERMISSION OF BB, AND IS DONE SO AT USER'S SOLE RISK. COPYRIGHT - ALL RIGHTS RESERVED.

STATE OF OHIO — ETTA M. REED — E-61606 — REGISTERED PROFESSIONAL ENGINEER — 9-5-23

Item	Revision Description	Date	Drwn:	Chk:
1	Revised as per BCWS	7-13-23	TAC	
2	Revised as per BCEO & Developer	7-19-23	TAC	
3	Split into Blocks A & B	8-18-23	TAC	
4	Added Entrance Wall & Revised per Ohio EPA	9-5-23	TAC	
5				
6				
7				
8				
9				

CARAVEL SECTION TWO

**SECTION 22, TOWN 3, RANGE 3
FAIRFIELD TOWNSHIP, BUTLER COUNTY, OHIO**

TITLE SHEET

bayer becker
www.bayerbecker.com
6900 Tylersville Road, Suite A
Mason, OH 45040 - 513.336.6600

Drawing:	19-0168-002 CD
Drawn by:	TAC
Checked By:	XXX
Issue Date:	5-16-23
Sheet:	1/13

Plot time: Sep 05, 2023 - 3:44pm
Drawing name: J:\2019\19-0168-002\CV\DWG\19-0168-002 CD.dwg - Layout Tab: 1TLT

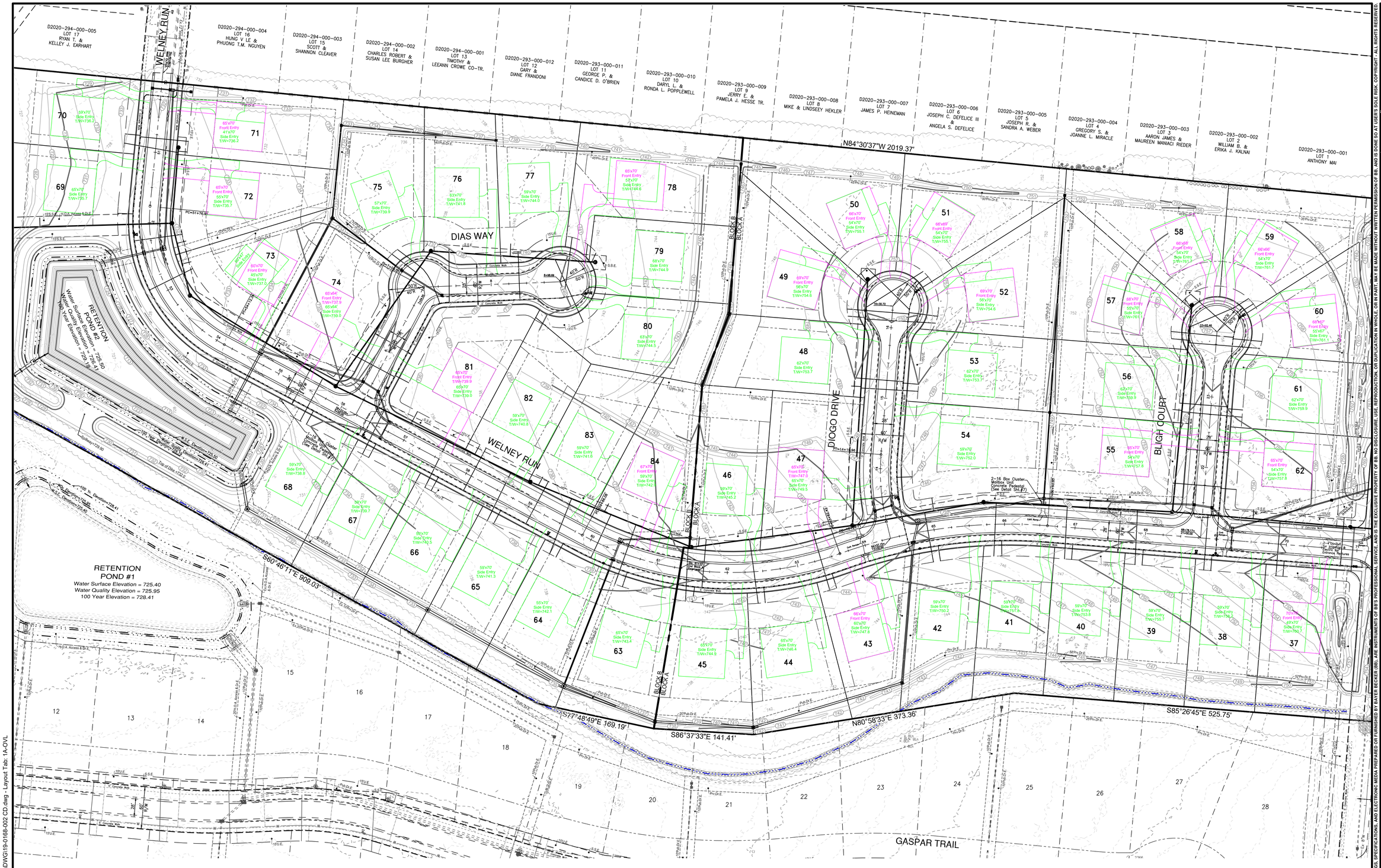

NOTE:
1. Unless otherwise noted on plan, all lots can accommodate a 70'x70' Front Entry Building Pad.
2. T/W elevation established by adding 4' to B/C elevation at center of driveway.

Basis of Bearing: State Plane NAD83 (2011)

SCALE: 1" = 60'

STATE OF OHIO ETTA R. BAYER REGISTERED PROFESSIONAL ENGINEER

9-5-23

Item	Revision Description	Date	Drwn:	Chk:
1				
2				
3				
4				
5				
6				
7				
8				
9				

CARAVEL SECTION TWO

SECTION 22, TOWN 3, RANGE 3
LIBERTY TOWNSHIP, BUTLER COUNTY, OHIO

BUILDING PADS

bayer becker
www.bayerbecker.com
6670 Yankee Road, Suite A
Mason, OH 45040 - 513.336.6600

Drawing:	19-0168-002 CD
Drawn by:	TAC
Checked By:	XXX
Issue Date:	5-16-23
Sheet:	1A/13

THIS DOCUMENT AND ALL RELATED DETAIL DRAWINGS, SPECIFICATIONS, AND ELECTRONIC MEDIA PREPARED OR FURNISHED BY BAYER BECKER (BB), ARE INSTRUMENTS OF BB'S PROFESSIONAL SERVICE, AND IS THE EXCLUSIVE PROPERTY OF BB. NO DISCLOSURE, USE, REPRODUCTION, OR DUPLICATION IN WHOLE, OR IN PART, MAY BE MADE WITHOUT WRITTEN PERMISSION OF BB, AND IS DONE SO AT USER'S SOLE RISK. COPYRIGHT - ALL RIGHTS RESERVED.

Plot time: Sep 05, 2023 - 3:34pm
Drawing name: J:\2019\19-0168-002\CV\DWG\19-0168-002 CD.dwg - Layout Tab: 1A-OVL

LOWER WATER MAIN UNDER STORM

REGULATED WATERWAY OF UNITED STATES

NOTES:

1. 48 hours notice to be given to affected residents before construction begins.
2. Lower 3/4" Water Services as needed to avoid conflicts with Storm with Min. 4' Cover.
3. Location of existing utilities to be determined in the field prior to work beginning.
4. All lots Sump to Sump Drain unless otherwise noted in plan.
5. Sump Lines to be installed as per Standard Service Detail. Wyes or Tees are to be placed ten feet past lot line, on the low side of specified lots, and marked with Wye poles.
6. Contractors to accept all quantities as correct prior to beginning construction.

NOTE:
At Crossings, the water main shall have a minimum vertical distance of eighteen (18") inches from storm and sanitary sewers. Also, one full length of water main shall be located so the joints are as far from the storm and sanitary sewers as possible. Fittings, not joint deflection, must be used when water main is lowered at crossings.

WATER MAIN RESTRAINT JOINT LOCATION CHART

Water Main Dia.	Horizontal 45°Bends	Vertical 45°Bends Up (Lower Water Under...)	Vertical 45°Bends Down (Lower Water Under...)	Dead Ends (Permanent & Temporary)	Tees (for Tee Branch) 6"	8"	10"
6"	18' both sides	18' both sides	36' both sides	72' Back	54'		
8"	18' both sides	36' both sides	36' both sides	90' Back	54'	72'	
10"	36' both sides	36' both sides	54' both sides	117' Back	54'	72'	90'
12"	36' both sides	54' both sides	72' both sides	180' Back	36'	72'	90'
14"	54' both sides	54' both sides	90' both sides	198' Back	36'	72'	90'
16"	54' both sides	54' both sides	90' both sides	216' Back	36'	54'	90'

NOTE: CONTRACTOR SHALL COORDINATE LOCATIONS OF PURITY TEST STATIONS WITH BCWS INSPECTOR

NOTE:
FOR DIAS COURT CENTERLINE PROFILE, SEE SHEET #3

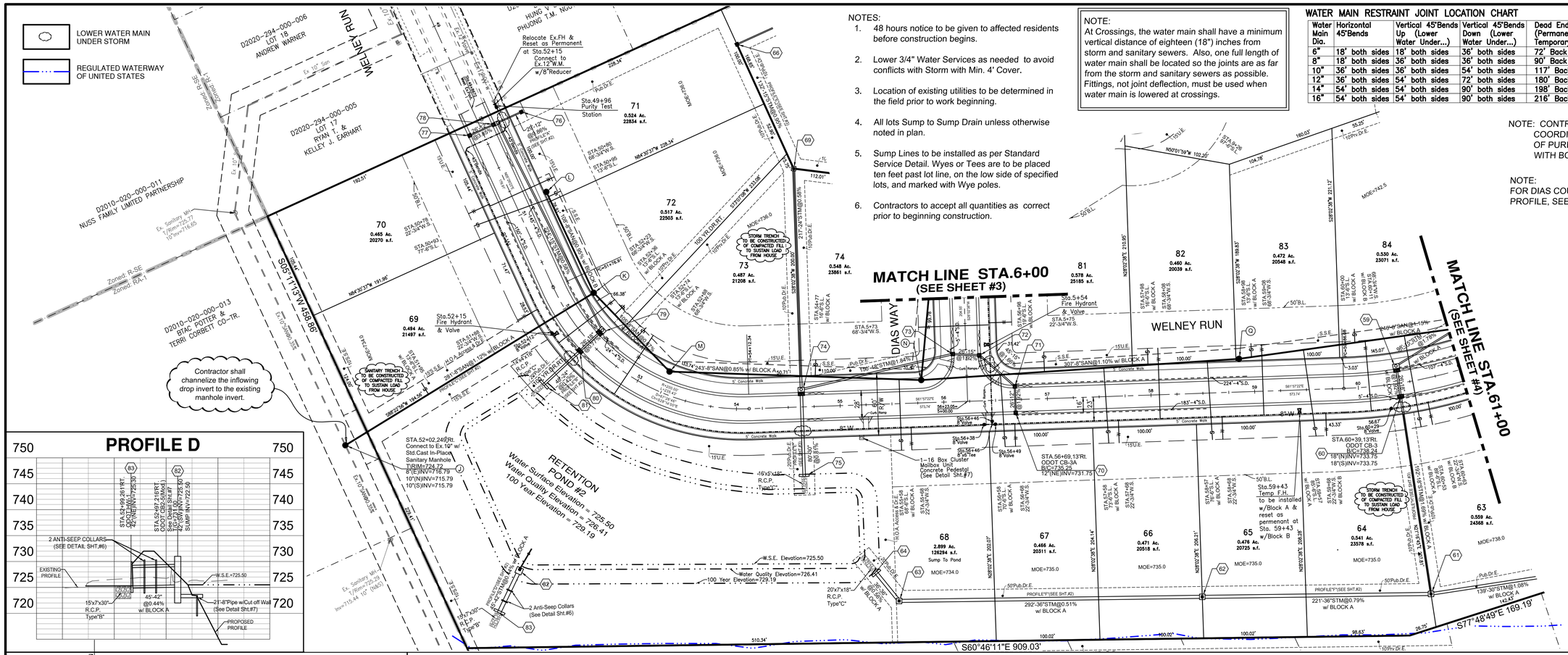

NOTE:
Sanitary laterals shall not be deeper than 12' at their ends per the requirement of the Developer.

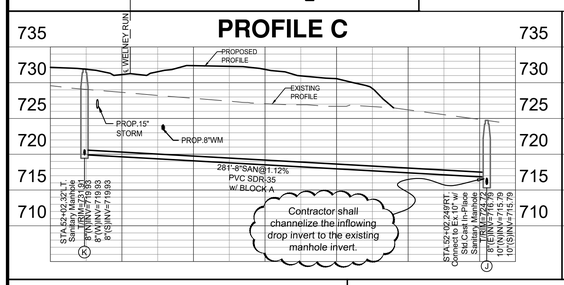

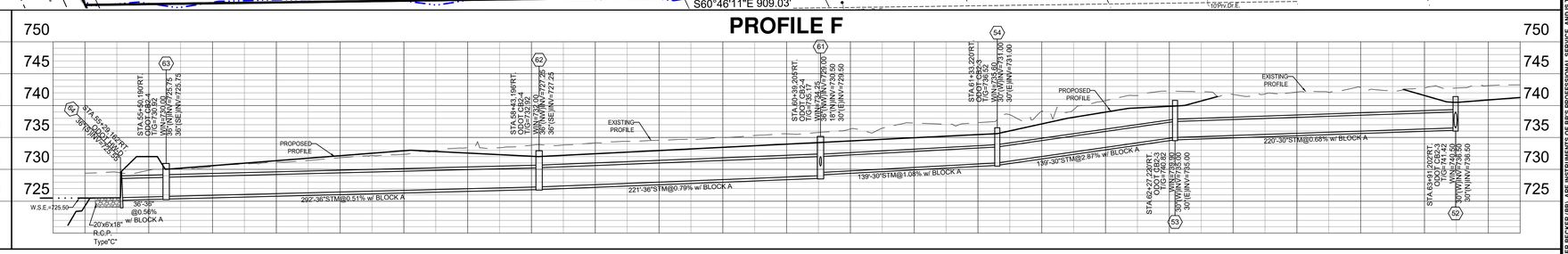

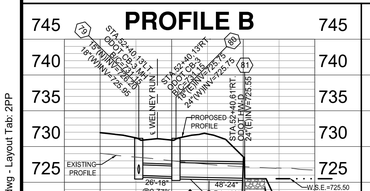

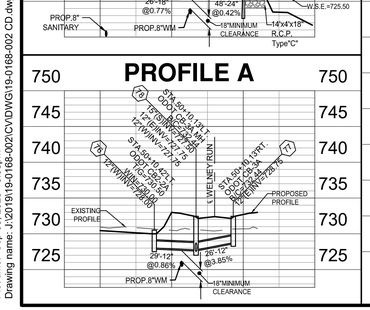

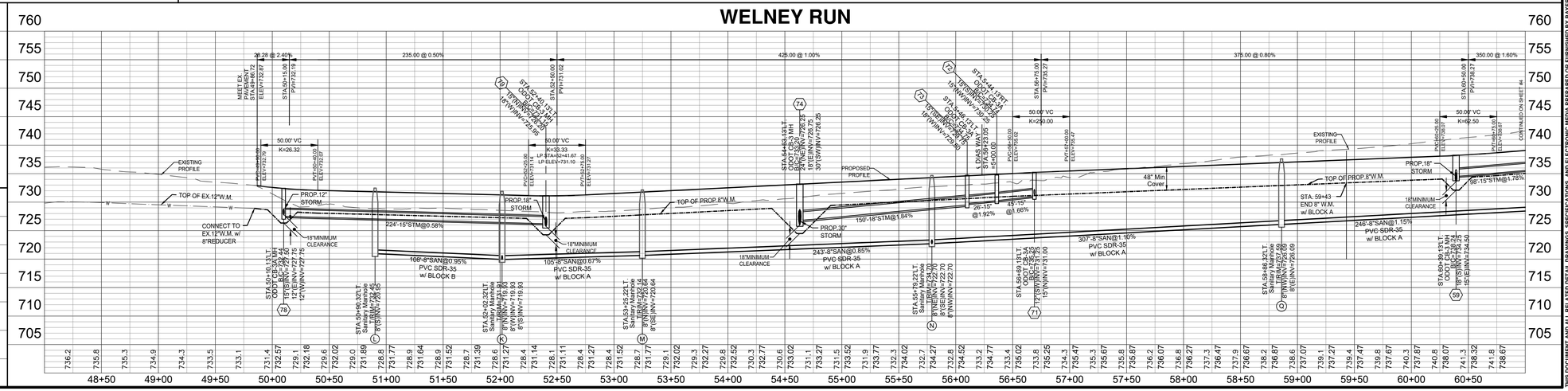

Basis of Bearing: State Plane NAD83 (2011)

SCALE: 1" = 50'

STATE OF OHIO ETHAN T. REECE 86136 REGISTERED PROFESSIONAL ENGINEER

9-5-23

Item	Revision Description	Date	Drawn:	Chk:
1	Revised as per BCWS	7-13-23	TAC	
2	Revised as per Developer	7-13-23	TAC	
3	Split into Block A & B	8-18-23	TAC	
4	Revised as per Ohio EPA	9-5-23	TAC	
5				
6				
7				
8				
9				

CARAVEL SECTION TWO

SECTION 22, TOWN 3, RANGE 3
LIBERTY TOWNSHIP, BUTLER COUNTY, OHIO

PLAN & PROFILE

bayer becker
www.bayerbecker.com
6900 Tylersville Road, Suite A
Mason, OH 45040 - 513.336.6600

Drawing: 19-0168-002 CD
Drawn by: TAC
Checked By: XXX
Issue Date: 5-16-23
Sheet: 2/13

THIS DOCUMENT AND ALL RELATED DETAIL DRAWINGS, SPECIFICATIONS, AND ELECTRONIC MEDIA PREPARED OR FURNISHED BY BAYER BECKER (BB), ARE INSTRUMENTS OF BB'S PROFESSIONAL SERVICE, AND IS THE EXCLUSIVE PROPERTY OF BB. NO DISCLOSURE, USE, REPRODUCTION, OR DUPLICATION IN WHOLE, OR IN PART, MAY BE MADE WITHOUT WRITTEN PERMISSION OF BB, AND IS DONE SO AT USER'S SOLE RISK. COPYRIGHT - ALL RIGHTS RESERVED.

Plot time: Sep 05, 2023 - 3:35pm
Drawing name: J:\2019\19-0168-002\CVD\DWG\19-0168-002 CD.dwg - Layout Tab: 2PP

NOTE: CONTRACTOR SHALL COORDINATE LOCATIONS OF PURITY TEST STATIONS WITH BCWS INSPECTOR

LOWER WATER MAIN UNDER STORM

REGULATED WATERWAY OF UNITED STATES

NOTES:

1. 48 hours notice to be given to affected residents before construction begins.
2. Lower 3/4" Water Services as needed to avoid conflicts with Storm with Min. 4' Cover.
3. Location of existing utilities to be determined in the field prior to work beginning.
4. All lots Sump to Sump Drain unless otherwise noted in plan.
5. Sump Lines to be installed as per Standard Service Detail. Wyes or Tees are to be placed ten feet past lot line, on the low side of specified lots, and marked with Wye poles.
6. Contractors to accept all quantities as correct prior to beginning construction.

NOTE:
At Crossings, the water main shall have a minimum vertical distance of eighteen (18") inches from storm and sanitary sewers. Also, one full length of water main shall be located so the joints are as far from the storm and sanitary sewers as possible. Fittings, not joint deflection, must be used when water main is lowered at crossings.

WATER MAIN RESTRAINT JOINT LOCATION CHART

Water Main Dia.	Horizontal 45°Bends	Vertical 45°Bends Up (Lower Water Under...)	Vertical 45°Bends Down (Lower Water Under...)	Dead Ends (Permanent & Temporary)	Tees (for Tee Branch) 6"	8"	10"
6"	18' both sides	18' both sides	36' both sides	72' Back	54'		
8"	18' both sides	36' both sides	36' both sides	90' Back	54'	72'	
10"	36' both sides	36' both sides	54' both sides	117' Back	54'	72'	90'
12"	36' both sides	54' both sides	72' both sides	180' Back	36'	72'	90'
14"	54' both sides	54' both sides	90' both sides	198' Back	36'	72'	90'
16"	54' both sides	54' both sides	90' both sides	216' Back	36'	54'	90'

NOTE:
Sanitary laterals shall not be deeper than 12' at their ends per the requirement of the Developer.

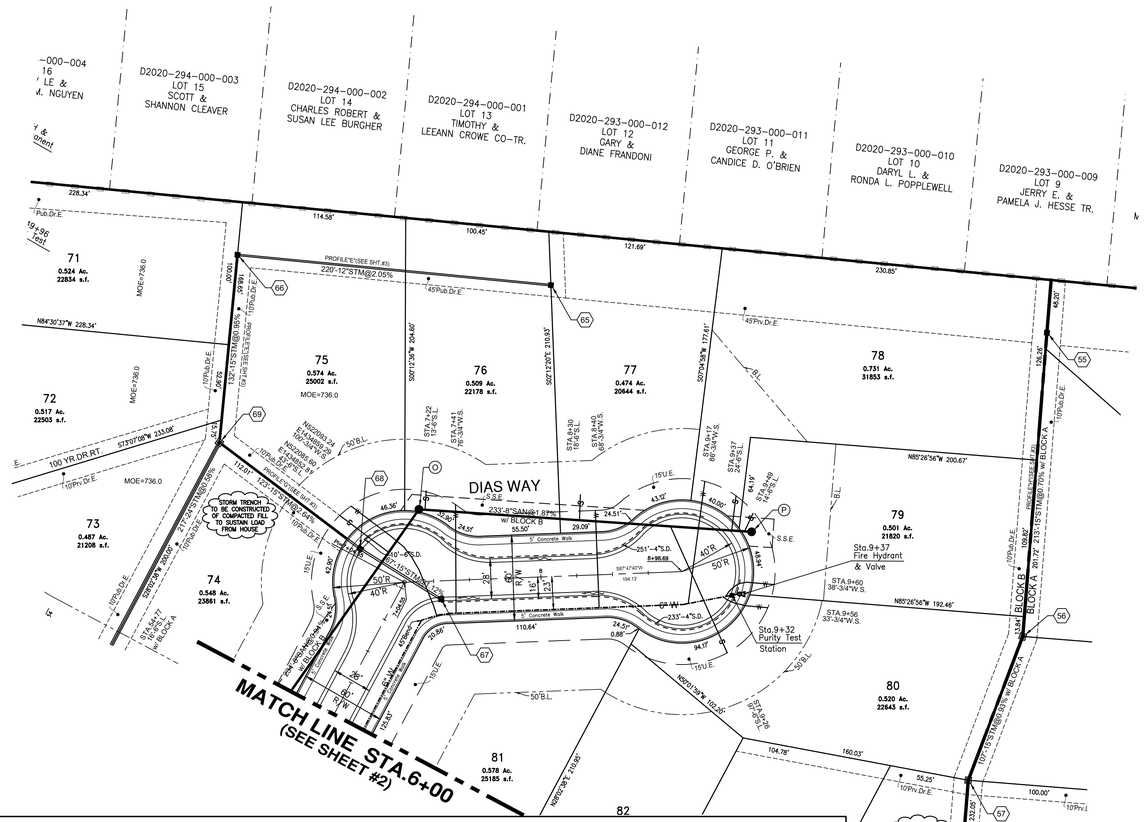

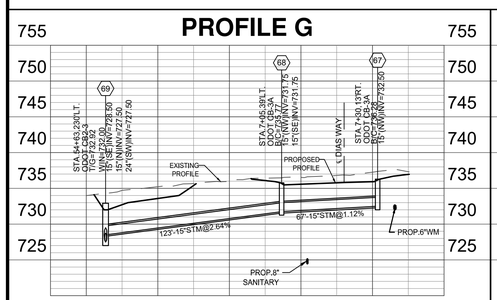

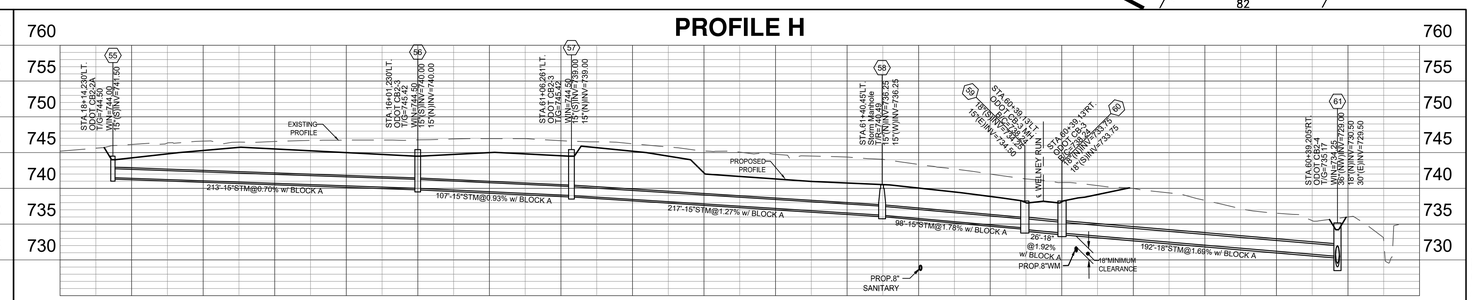

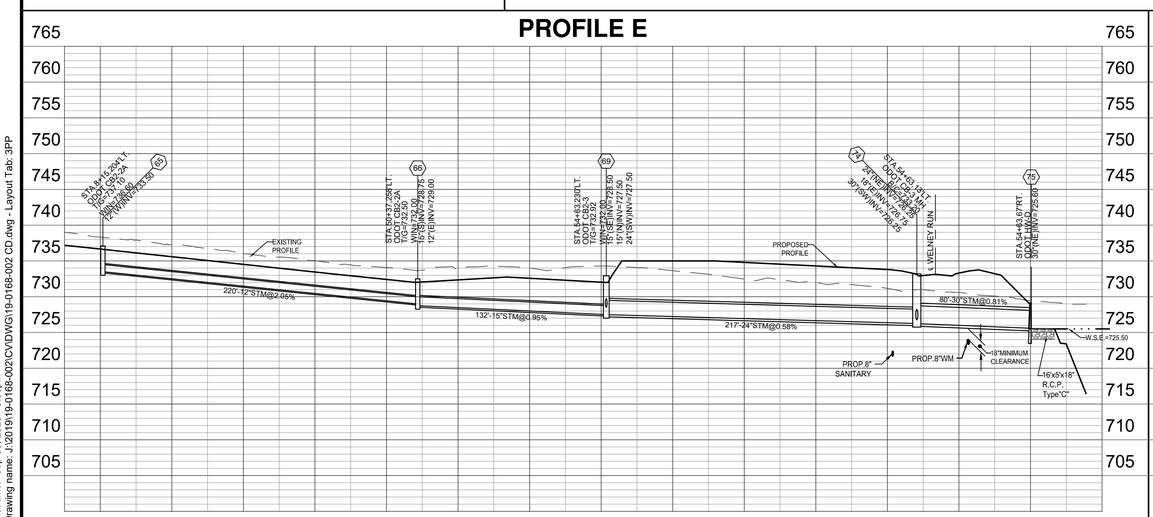

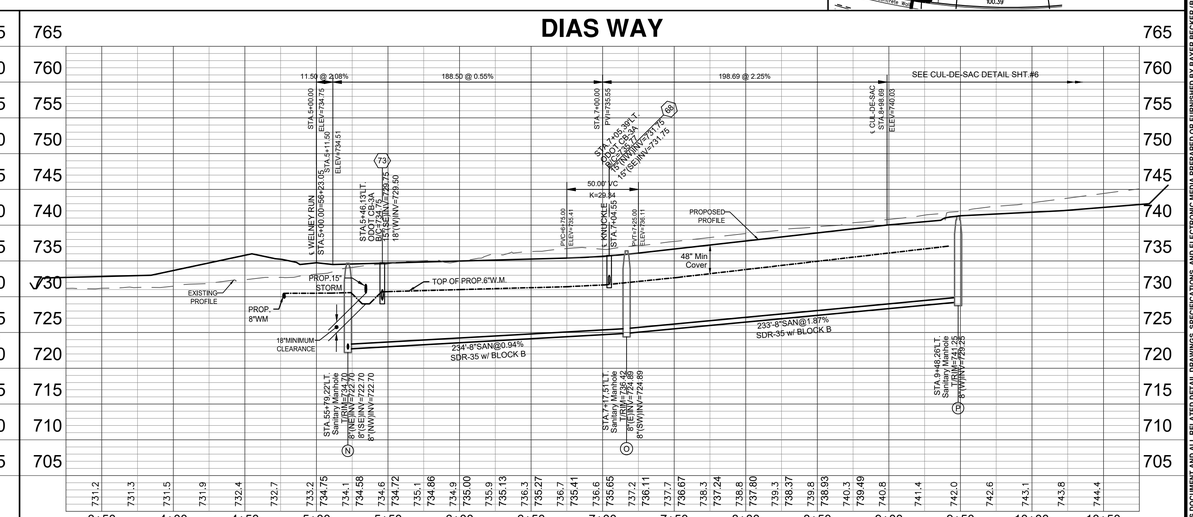

Plot time: Sep 05, 2023 - 3:36pm
Drawing name: J:\2019\19-0168-002\CV\DWG\19-0168-002 CD.dwg - Layout Tab: 3PP

THE DOCUMENT AND ALL RELATED DETAIL DRAWINGS, SPECIFICATIONS, AND ELECTRONIC MEDIA PREPARED OR FURNISHED BY BAYER BECKER (BB), ARE INSTRUMENTS OF BB'S PROFESSIONAL SERVICE, AND IS THE EXCLUSIVE PROPERTY OF BB. NO DISCLOSURE, USE, REPRODUCTION, OR DUPLICATION IN WHOLE, OR IN PART, MAY BE MADE WITHOUT WRITTEN PERMISSION OF BB, AND IS DONE SO AT USER'S SOLE RISK. COPYRIGHT - ALL RIGHTS RESERVED.

Basis of Bearing: State Plane NAD83 (2011)
SCALE: 1" = 50'

Item	Revision Description	Date	Drwn:	Chk:
1	Revised as per Developer	7-19-23	TAC	
2	Split into Blocks A & B	8-16-23	TAC	
3				
4				
5				
6				
7				
8				
9				

CARAVEL SECTION TWO

SECTION 22, TOWN 3, RANGE 3
LIBERTY TOWNSHIP, BUTLER COUNTY, OHIO

PLAN & PROFILE

bayer becker
www.bayerbecker.com
6960 Cornerstone Blvd., Suite A
Mason, OH 45040 - 513.336.6600

Drawing: 19-0168-002 CD
Drawn by: TAC
Checked By: XXX
Issue Date: 5-16-23
Sheet: 3/13

LOWER WATER MAIN UNDER STORM

REGULATED WATERWAY OF UNITED STATES

NOTE:
FOR DIOGO DRIVE & BLIGH COURT CENTERLINE PROFILES, SEE SHEET #5

NOTE: CONTRACTOR SHALL COORDINATE LOCATIONS OF PURITY TEST STATIONS WITH BCWS INSPECTOR

NOTES:

1. 48 hours notice to be given to affected residents before construction begins.
2. Lower 3/4" Water Services as needed to avoid conflicts with Storm with Min. 4' Cover.
3. Location of existing utilities to be determined in the field prior to work beginning.
4. All lots Sump to Sump Drain unless otherwise noted in plan.
5. Sump Lines to be installed as per Standard Service Detail. Wyes or Tees are to be placed ten feet past lot line, on the low side of specified lots, and marked with Wye poles.
6. Contractors to accept all quantities as correct prior to beginning construction.

NOTE:
At Crossings, the water main shall have a minimum vertical distance of eighteen (18") inches from storm and sanitary sewers. Also, one full length of water main shall be located so the joints are as far from the storm and sanitary sewers as possible. Fittings, not joint deflection, must be used when water main is lowered at crossings.

NOTE:
Sanitary laterals shall not be deeper than 12' at their ends per the requirement of the Developer.

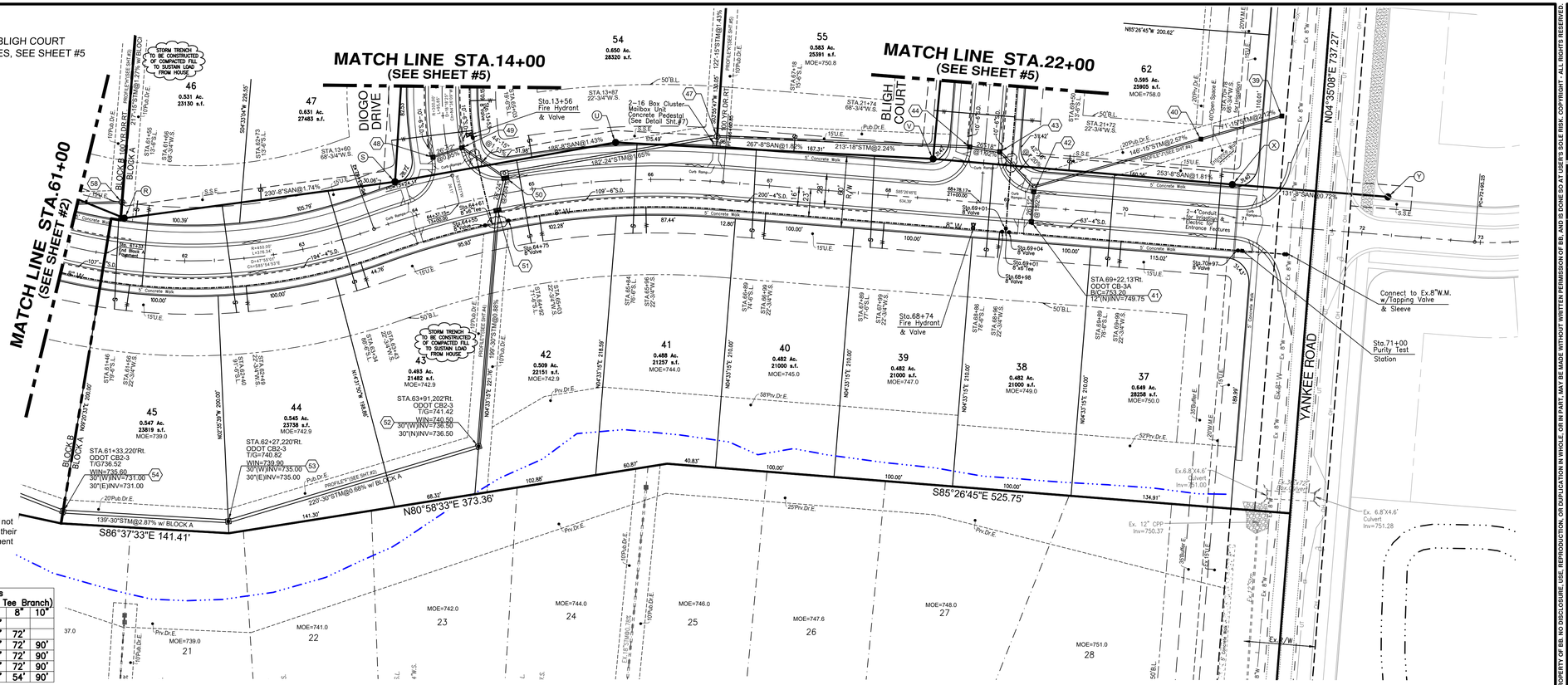

WATER MAIN RESTRAINT JOINT LOCATION CHART

Water Main Dia.	Horizontal 45°Bends	Vertical 45°Bends Up (Lower Water Under...)	Vertical 45°Bends Down (Lower Water Under...)	Dead Ends (Permanent & Temporary)	Tees (for Tee Branch) 6"	8"	10"
6"	18' both sides	18' both sides	36' both sides	72' Back	54'		
8"	18' both sides	36' both sides	36' both sides	90' Back	54'	72'	
10"	36' both sides	36' both sides	54' both sides	117' Back	54'	72'	90'
12"	36' both sides	54' both sides	72' both sides	180' Back	36'	72'	90'
14"	54' both sides	54' both sides	90' both sides	198' Back	36'	72'	90'
16"	54' both sides	54' both sides	90' both sides	216' Back	36'	54'	90'

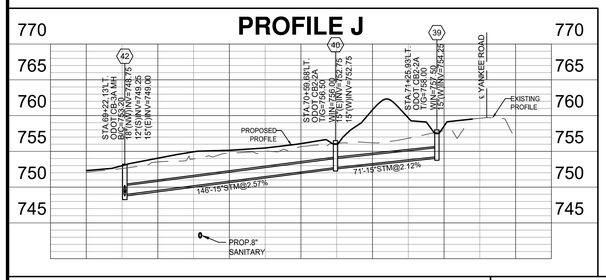

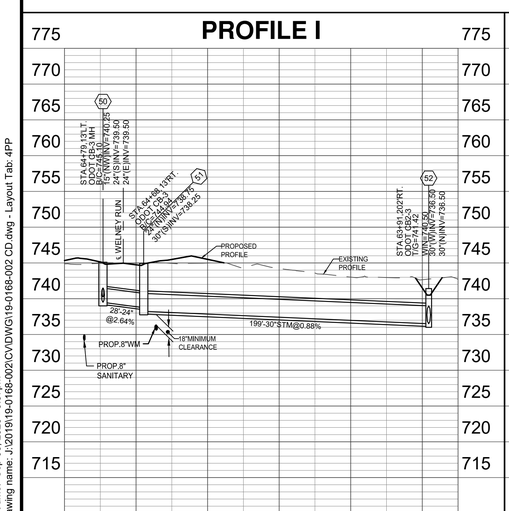

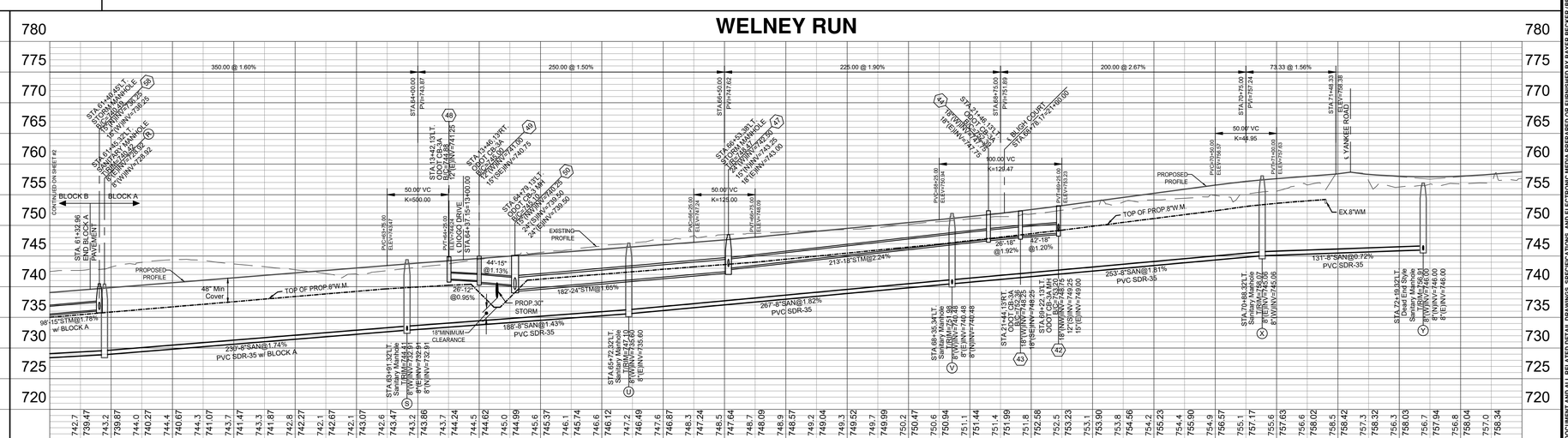

NOTE:
LOTS 37, 59, 60, 61 & 62 SHALL NOT HAVE DRIVEWAY ACCESS TO YANKEE ROAD.

Basis of Bearing: State Plane NAD83 (2011)
SCALE: 1" = 50'

Item	Revision Description	Date	Drwn:	Chk:
1	Revised as per BCWS & Developer	7-13-23	TAC	
2	Split into Block A & B	8-18-23	TAC	
3	Added Entrance Wall & Adjusted Storm and Water Lateral	9-5-23	TAC	
4				
5				
6				
7				
8				
9				

CARAVEL SECTION TWO

SECTION 22, TOWN 3, RANGE 3
LIBERTY TOWNSHIP, BUTLER COUNTY, OHIO

PLAN & PROFILE

bayer becker
www.bayerbecker.com
6070 Tacoma Drive
Mason, OH 45040 - 513.338.6600

Drawing: 19-0168-002 CD
Drawn by: TAC
Checked By: XXX
Issue Date: 5-16-23
Sheet: 4/13

THIS DOCUMENT AND ALL RELATED DETAIL DRAWINGS, SPECIFICATIONS, AND ELECTRONIC MEDIA PREPARED OR FURNISHED BY BAYER BECKER (BB), ARE INSTRUMENTS OF BB'S PROFESSIONAL SERVICE, AND IS THE EXCLUSIVE PROPERTY OF BB. NO DISCLOSURE, USE, REPRODUCTION, OR DUPLICATION IN WHOLE, OR IN PART, MAY BE MADE WITHOUT WRITTEN PERMISSION OF BB, AND IS DONE SO AT USER'S SOLE RISK. COPYRIGHT - ALL RIGHTS RESERVED.

Plot time: Sep 05, 2023 - 3:37pm
Drawing name: J:\2019\19-0168-002\CV\DWG\19-0168-002 CD.dwg - Layout Tab: 4PP

LOWER WATER MAIN UNDER STORM

REGULATED WATERWAY OF UNITED STATES

NOTE: CONTRACTOR SHALL COORDINATE LOCATIONS OF PURITY TEST STATIONS WITH BCWS INSPECTOR

NOTES:

1. 48 hours notice to be given to affected residents before construction begins.
2. Lower 3/4" Water Services as needed to avoid conflicts with Storm with Min. 4' Cover.
3. Location of existing utilities to be determined in the field prior to work beginning.
4. All lots Sump to Sump Drain unless otherwise noted in plan.
5. Sump Lines to be installed as per Standard Service Detail. Wyes or Tees are to be placed ten feet past lot line, on the low side of specified lots, and marked with Wye poles.
6. Contractors to accept all quantities as correct prior to beginning construction.

NOTE:
At Crossings, the water main shall have a minimum vertical distance of eighteen (18") inches from storm and sanitary sewers. Also, one full length of water main shall be located so the joints are as far from the storm and sanitary sewers as possible. Fittings, not joint deflection, must be used when water main is lowered at crossings.

NOTE:
Sanitary laterals shall not be deeper than 12' at their ends per the requirement of the Developer.

WATER MAIN RESTRAINT JOINT LOCATION CHART

Water Main Dia.	Horizontal 45°Bends	Vertical 45°Bends Up (Lower Water Under...)	Vertical 45°Bends Down (Lower Water Under...)	Dead Ends (Permanent & Temporary)	Tees (for Tee Branch) 6"	8"	10"
6"	18' both sides	18' both sides	36' both sides	72' Back	54'		
8"	18' both sides	36' both sides	36' both sides	90' Back	54'	72'	
10"	36' both sides	36' both sides	54' both sides	117' Back	54'	72'	90'
12"	36' both sides	54' both sides	72' both sides	180' Back	36'	72'	90'
14"	54' both sides	54' both sides	90' both sides	198' Back	36'	72'	90'
16"	54' both sides	54' both sides	90' both sides	216' Back	36'	54'	90'

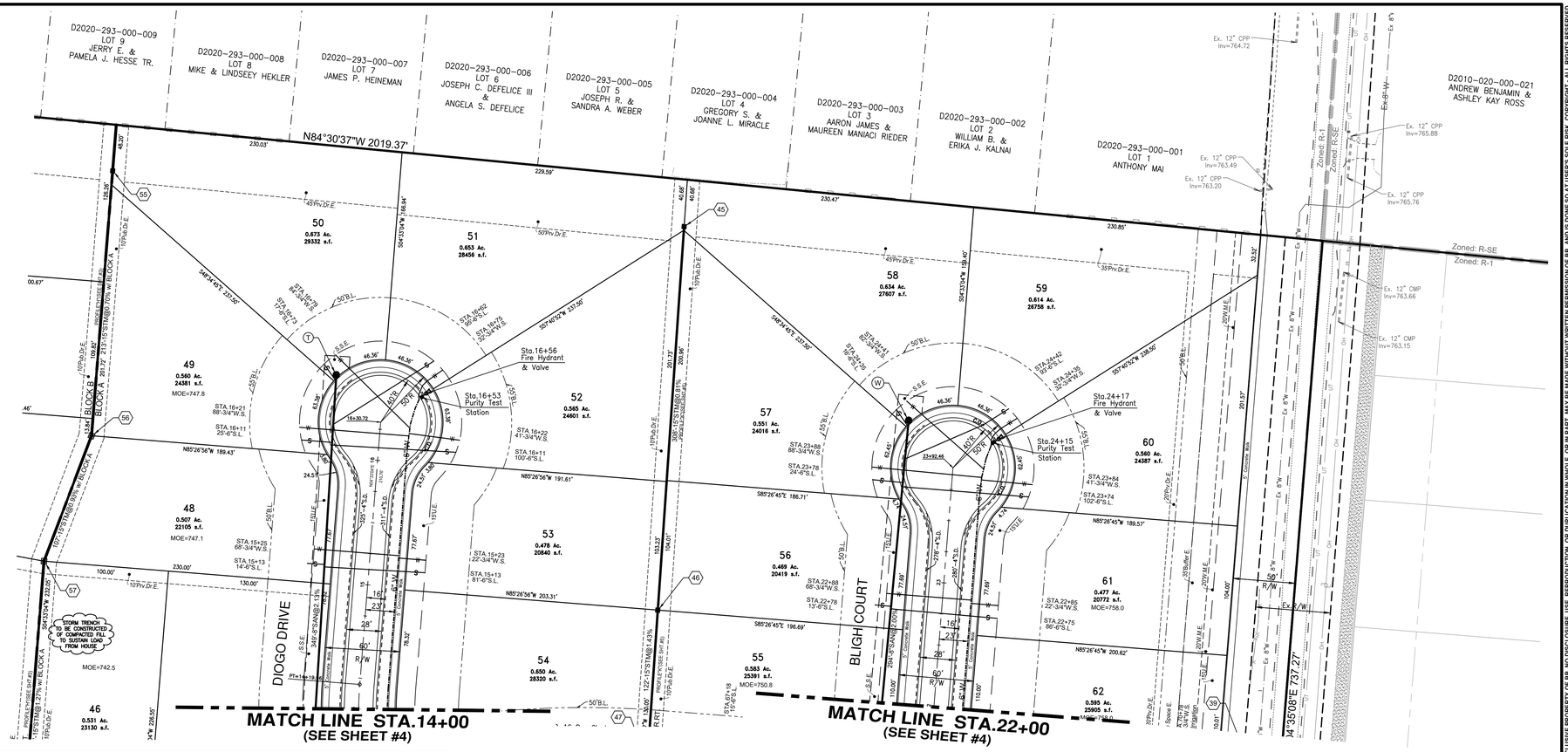

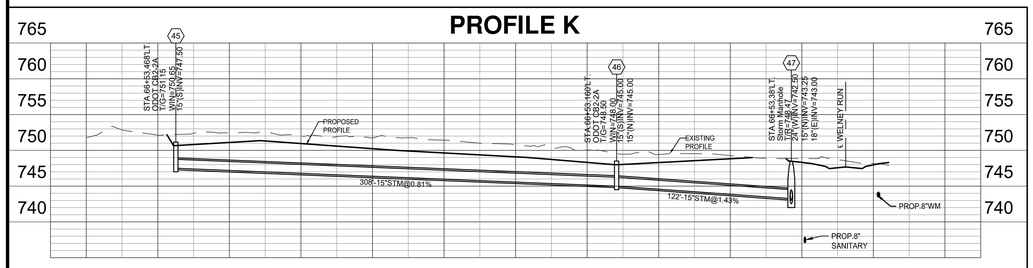

NOTE:
LOTS 37, 59, 60, 61 & 62 SHALL NOT HAVE DRIVEWAY ACCESS TO YANKEE ROAD.

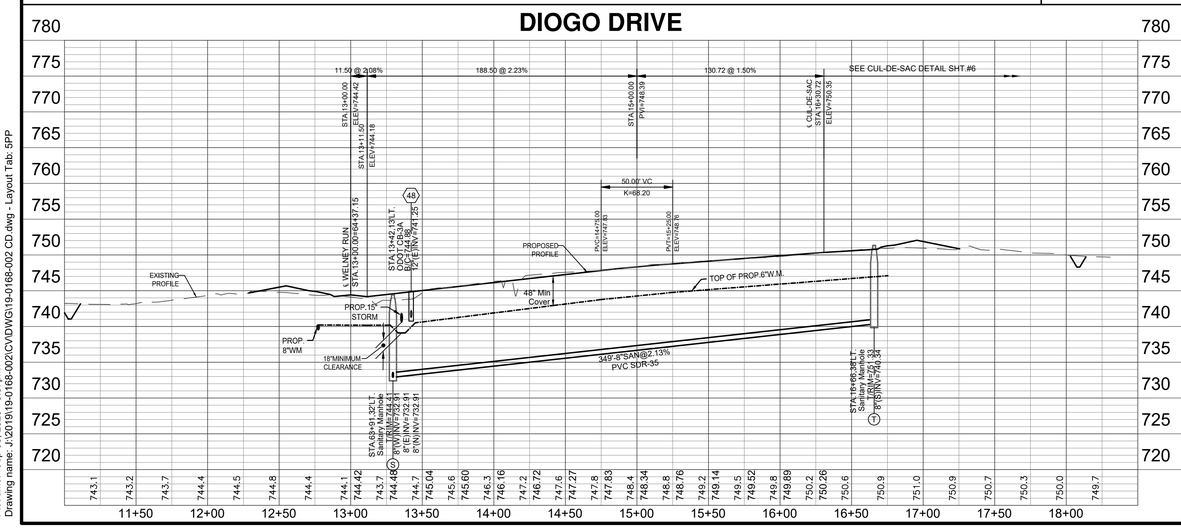

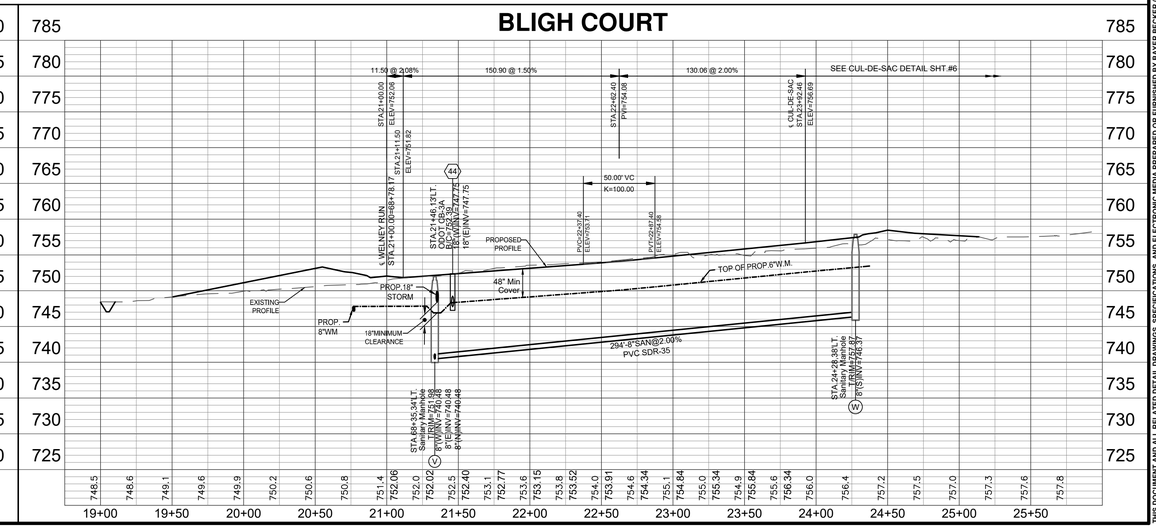

Basis of Bearing: State Plane NAD83 (2011)

SCALE: 1" = 50'

Item	Revision Description	Date	Drwn:	Chk:
1	Revised as per Developer	7-19-23	TAC	
2	Split into Blocks A & B	8-16-23	TAC	
3				
4				
5				
6				
7				
8				
9				

CARAVEL SECTION TWO

SECTION 22, TOWN 3, RANGE 3
LIBERTY TOWNSHIP, BUTLER COUNTY, OHIO

PLAN & PROFILE

bayer becker
www.bayerbecker.com
6800 Thompson Road, Suite A
Mason, OH 45040 - 513.336.6600

Drawing: 19-0168-002 CD
Drawn by: TAC
Checked By: XXX
Issue Date: 5-16-23
Sheet: 5/13

THE DOCUMENT AND ALL RELATED DETAIL DRAWINGS, SPECIFICATIONS, AND ELECTRONIC MEDIA PREPARED OR FURNISHED BY BAYER BECKER (BB), ARE INSTRUMENTS OF BB'S PROFESSIONAL SERVICE, AND IS THE EXCLUSIVE PROPERTY OF BB. NO DISCLOSURE, USE, REPRODUCTION, OR DUPLICATION IN WHOLE, OR IN PART, MAY BE MADE WITHOUT WRITTEN PERMISSION OF BB, AND IS DONE SO AT USER'S SOLE RISK. COPYRIGHT - ALL RIGHTS RESERVED.

Plot time: Sep 05, 2023 - 3:37pm
Drawing name: J:\2019\19-0168-002\CV\DWG\19-0168-002 CD.dwg - Layout Tab: 5PP

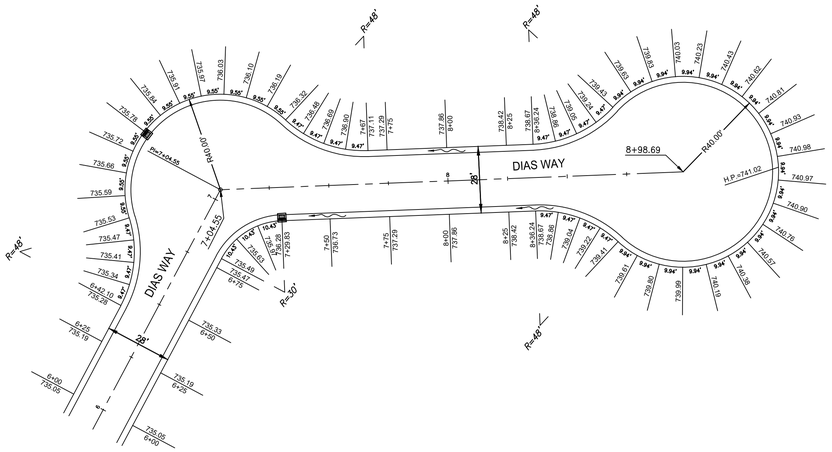

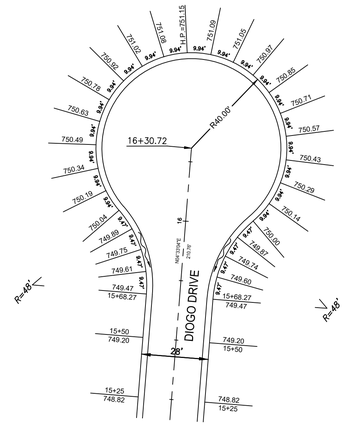

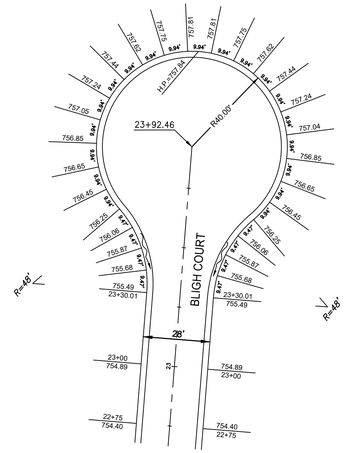

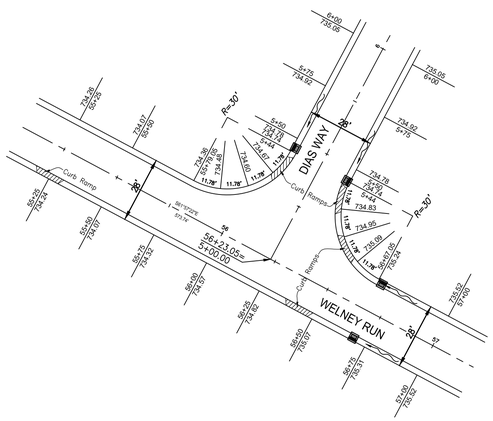

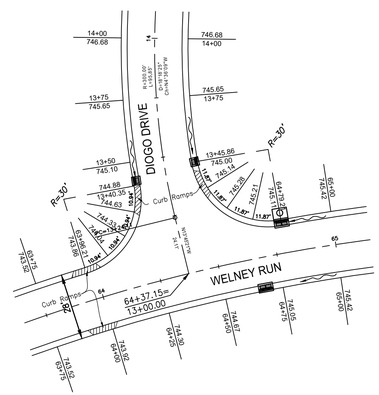

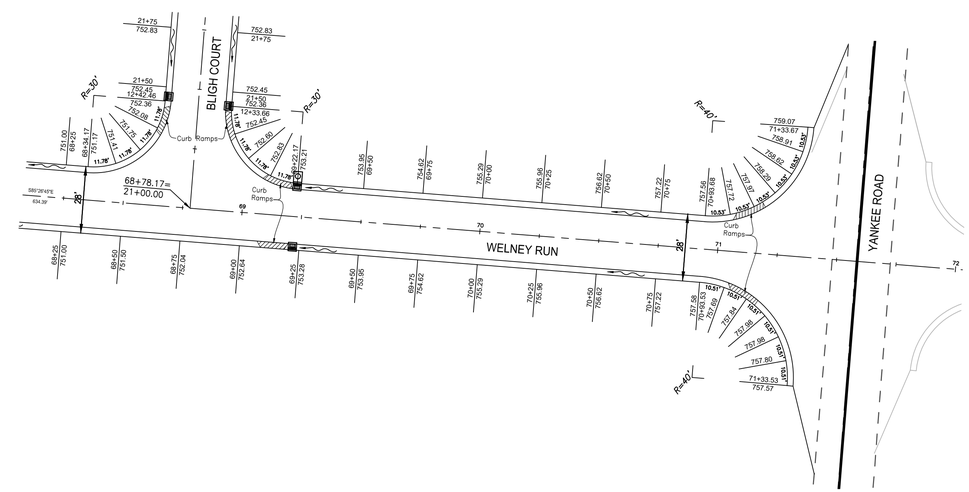

DETAIL SCALE: 1"=30'

Basis of Bearing:
State Plane NAD83 (2011)

0 30 45

SCALE: 1" = 30'

STATE OF OHIO
ETTA M. REINS
REGISTERED
PROFESSIONAL ENGINEER
9-5-23

Item	Revision Description	Date	Drawn:	Chk:
1				
2				
3				
4				
5				
6				
7				
8				
9				

CARAVEL SECTION TWO

SECTION 22, TOWN 3, RANGE 3
LIBERTY TOWNSHIP, BUTLER COUNTY, OHIO

INTERSECTION DETAILS

bayer becker
www.bayerbecker.com
6800 Tylersville Road, Suite A
Mason, OH 45040 - 513.338.6600

Drawing: 19-0168-002 CD
Drawn by: TAC
Checked By: XXX
Issue Date: 5-16-23
Sheet: 6/13

THIS DOCUMENT AND ALL RELATED DETAIL DRAWINGS, SPECIFICATIONS, AND ELECTRONIC MEDIA PREPARED OR FURNISHED BY BAYER BECKER (BB), ARE INSTRUMENTS OF BB'S PROFESSIONAL SERVICE, AND IS THE EXCLUSIVE PROPERTY OF BB. NO DISCLOSURE, USE, REPRODUCTION, OR DUPLICATION IN WHOLE, OR IN PART, MAY BE MADE WITHOUT WRITTEN PERMISSION OF BB, AND IS DONE SO AT USER'S SOLE RISK. COPYRIGHT - ALL RIGHTS RESERVED.

Plot time: Sep 05, 2023 - 3:40pm
Drawing name: J:\2019\19-0168-002\CV\DWG\19-0168-002 CD.dwg - Layout Tab: 6INT

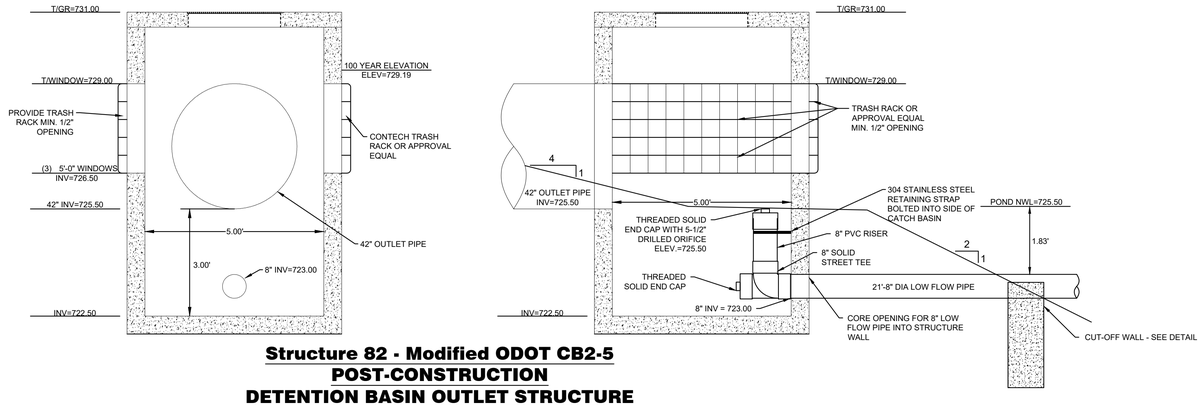

Structure 82 - Modified ODOT CB2-5
POST-CONSTRUCTION
DETENTION BASIN OUTLET STRUCTURE

NOT TO SCALE

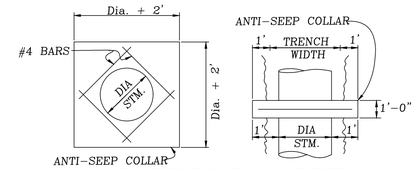

ANTI-SEEP/FLOAT COLLAR DETAIL

NOT TO SCALE

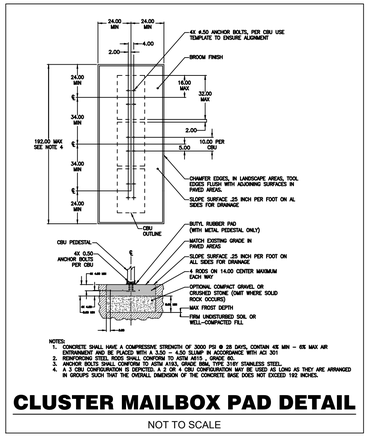

NOTES:
1. CONCRETE SHALL HAVE A COMPRESSIVE STRENGTH OF 3000 PSI @ 28 DAYS, CONTAIN 4% MIN - 6% MAX AIR ENTRAINMENT AND BE 3-INCH MIN & 5.50 - 6.50-INCH SLUMP IN ACCORDANCE WITH ACI 301.
2. REINFORCING STEEL RODS SHALL CONFORM TO ASTM A615 , GRADE 60.
3. ANCHOR BOLTS SHALL CONFORM TO ASTM A193, GRADE B8M, TYPE 316Y STAINLESS STEEL.
4. A 3 CBU CONFIGURATION IS DEPICTED. A 2 OR 4 CBU CONFIGURATION MAY BE USED AS LONG AS THEY ARE ARRANGED IN GROUPS SUCH THAT THE OVERALL DIMENSION OF THE CONCRETE BASE DOES NOT EXCEED 192 INCHES.

CLUSTER MAILBOX PAD DETAIL

NOT TO SCALE

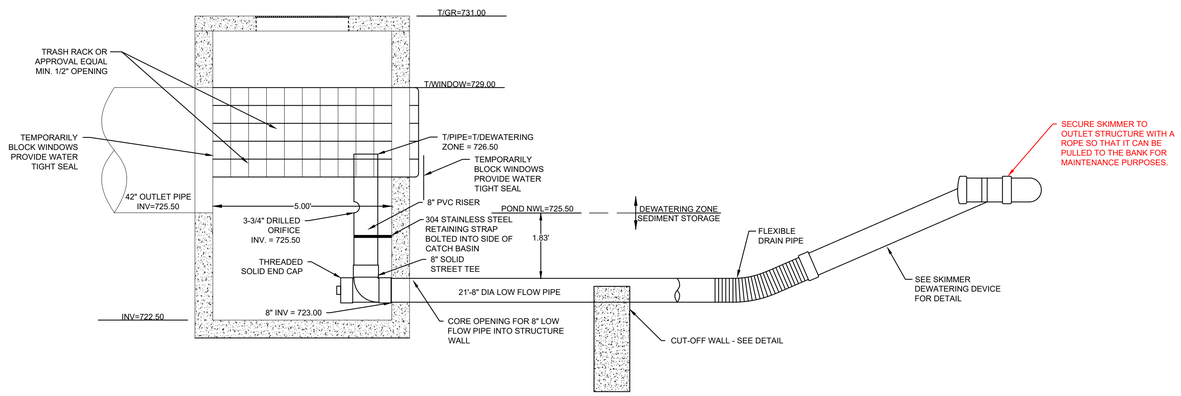

Structure 82 - Modified ODOT CB2-5
TEMPORARY SEDIMENT
BASIN OUTLET DETAIL

NOT TO SCALE

NOTES:
1. ALL JOINTS OF THE FLOATATION SECTION SHALL BE GLUED TOGETHER AND WATERTIGHT. JOINTS OF THE SKIMMER SECTION NEED NOT BE WATERTIGHT.
2. TO INSTALL DEWATERING PIPE STUB:
   2.1. FOR CORRUGATED METAL RISER, STUB SHALL BE SCH 40 STEEL PIPE TACK WELDED TO CREATE A WATERTIGHT SEAL.
   2.2. FOR CONCRETE RISER, STUB SHALL BE SCH 40 PVC PIPE GROUTED TO CREATE A WATERTIGHT SEAL.
3. FLEXIBLE, NON-PERFORATED HDPE DRAIN PIPE SHALL BE ATTACHED TO OUTLET STRUCTURE DEWATERING STUB WITH WATER-TIGHT CONNECTIONS.
4. ORIFICE HAS BEEN SIZED FOR A MINIMUM 48-HOUR DEWATERING TIME.
5. SECURE SKIMMER TO OUTLET STRUCTURE WITH A ROPE SO THAT IT CAN BE PULLED TO THE BANK FOR MAINTENANCE PURPOSES.

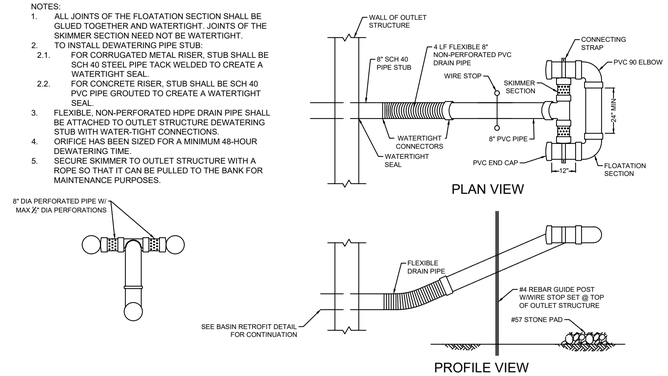

SKIMMER
DEWATERING DEVICE

NOT TO SCALE

PIPE SIZE	WIDTH	PIPE SIZE	WIDTH
3"	1'0"	27"	4'6"
6"	1'0"	30"	5'0"
8"	2'0"	33"	5'6"
12"	2'0"	36"	6'0"
15"	2'6"	39"	6'6"
18"	3'0"	42"	7'0"
24"	4'0"	48"	8'0"

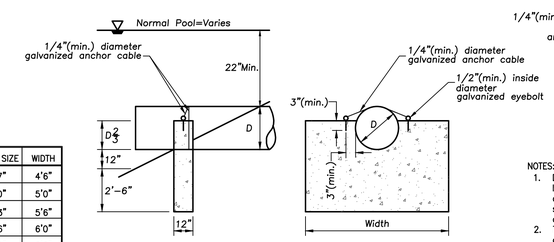

CUT-OFF WALL DETAIL

NOT TO SCALE

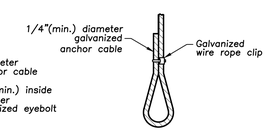

ANCHOR CABLE DETAIL FOR EYEBOLT

NOTES:
1. Drill openings a minimum of 3" deep for eyebolts at the locations shown. Insert entire length of bolt shank into opening. Fill openings with grout and allow to harden before securing anchor cable. Alternatively, place eyebolts in wet concrete at the locations shown above.
2. Tightly wrap galvanized anchor cable one time completely around the circumference of the conduit.
3. Cut galvanized anchor to length required.
4. Place cable through eyebolt and form a loop as shown in the above detail. Ensure the cable is pulled to a tight fit and secured with a galvanized wire rope clip.

Basis of Bearing: State Plane NAD83 (2011)

0 50 75
SCALE: 1" = 20'

STATE OF OHIO
ETTA R. REED
E-73016
REGISTERED
PROFESSIONAL ENGINEER
9-5-23

Item	Revision Description	Date	Drwn:	Chk:
1	Revised as per BCEO	7-19-23	TAC	
2				
3				
4				
5				
6				
7				
8				
9				

CARAVEL SECTION TWO
SECTION 22, TOWN 3, RANGE 3
LIBERTY TOWNSHIP, BUTLER COUNTY, OHIO

DRAINAGE DETAILS

bayer becker
www.bayerbecker.com
6900 Tylersville Road, Suite A
Mason, OH 45040 - 513.336.6600

Drawing: 19-0168-002 CD
Drawn by: TAC
Checked By: TAC
Issue Date: 5-16-23
Sheet: 7/13

THIS DOCUMENT AND ALL RELATED DETAIL DRAWINGS, SPECIFICATIONS, AND ELECTRONIC MEDIA PREPARED OR FURNISHED BY BAYER BECKER (BB), ARE INSTRUMENTS OF BB'S PROFESSIONAL SERVICE, AND IS THE EXCLUSIVE PROPERTY OF BB. NO DISCLOSURE, USE, REPRODUCTION, OR DUPLICATION IN WHOLE, OR IN PART, MAY BE MADE WITHOUT WRITTEN PERMISSION OF BB, AND IS DONE SO AT USER'S SOLE RISK. COPYRIGHT - ALL RIGHTS RESERVED.

Plot time: Sep 05, 2023 - 3:41pm
Drawing name: J:\2019\19-0168-002\CV\DWG\19-0168-002 CD.dwg - Layout Tab: 7DTL

Note: All ditches constructed by the Developer shall be sodded or hydra-seeded.

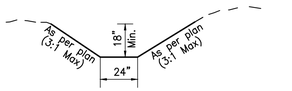

TYPICAL DITCH SECTION

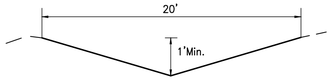

TYPICAL DRAINAGE ROUTE SECTION

NOTE:
Geotechnical Engineer to be on site during construction of Retention Basin.

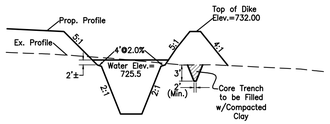

RETENTION POND DAM TYPICAL SECTION
(Not to Scale)

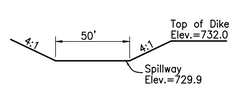

RETENTION POND SPILLWAY DETAIL
(Not to Scale)

SOIL TYPES

CLEARING LIMITS

SILT FENCE OR MULCH BERM

REGULATED WATERWAY OF STATE OF OHIO

RIPARIAN AREA: NO DISTURBANCE PERMITTED

CORE TRENCH (SEE DETAIL SHEET #8)

EROSION CONTROL NOTES

1. SEEDING AND MULCHING
2. SODDING
3. PRESERVE EXISTING VEGETATION
4. STRAW BALE
5. SILT FENCE OR MULCH BERM
6. SOIL PILES
7. TEMPORARY STREAM CROSSING
8. GRAVEL CURB INLET SEDIMENT FILTER
9. GEOTEXTILE INLET SEDIMENT FILTER
10. GABIONS
11. STRAW BALE DROP INLET SEDIMENT FILTER
12. SOD DROP INLET SEDIMENT FILTER
13. GRAVEL & WIRE MESH DROP INLET SEDIMENT FILTER
14. BLOCK & GRAVEL CURB INLET SEDIMENT FILTER
15. TEMPORARY SEDIMENT TRAPS & DAMS
16. DIKES & SLOPE PROTECTION
17. ROLLED GRAVEL CURB INLET SEDIMENT FILTER
18. CHECK DAM
19. TEMPORARY DETENTION SEDIMENT FILTER/BASIN
20. DANDY BAG/BEAVER DAM® OR EQUAL
21. CONSTRUCTION ENTRANCE
22. CONCRETE WASHOUT AREA

SEE SOIL EROSION & SEDIMENTATION CONTROL DETAIL SHEET (Page #13)

PROJECT DATA	
Total Area	33.65 Ac.
Sediment Basin Calculations:	
Drainage Area	32.80 Ac.
Disturbed Tributary Area	23.13 Ac.
Required Sediment Storage	0.53 Ac./Ft.
Required Dewatering Storage	1.27 Ac/Ft
Water Quality Volume Required	0.68 Ac./Ft.
Estimated Proposed Impervious Area	8.28 Ac.(25%)
Pre-Developed Runoff Coefficient	0.32
Post-Developed Runoff Coefficient	0.50
Immediate Receiving Waters	Unnamed Tributary to Panther Run Creek
Subsequent Receiving Waters	Panther Run Creek

SOIL TYPES

Symbol	Name	Type
FcA	Fincastle silt loam 0 to 2 percent slopes	D
RdA	Raub silt loam 0 to 2 percent slopes	D
RdB	Raub silt loam 2 to 6 percent slopes	C
XeB	Xenia silt loam, 2 to 6 percent slopes	C
XeB2	Xenia silt loam, 2 to 6 percent slopes, moderately eroded	D

NOTE:
The Temporary Sediment Basins are to be cleaned out in accordance with the Rainwater and Land Development Manual and Butler County standards.

NOTES:

1. Regular inspection and maintenance will be provided for all erosion and sediment control practices. Permanent records of maintenance and inspections must be kept throughout the construction period. Inspections must be made a minimum of once every seven (7) days and immediately after storm events greater than 0.5 inches of rain in a 24 hour period. Provided will be name of inspector, major observations, date of inspection and corrective measures taken.
2. All erosion and sediment control practices must conform to the specifications of Rainwater and Land Development, Ohio's standards for storm water management, land development and urban stream protection.
3. Perimeter Sedimentation control and basins/traps shall be implemented as the first step of grading and within seven (7) days of initial grubbing or grading and shall continue to function until upland areas are stabilized.
4. Disturbed areas which will remain unworked for a period of fourteen (14) days or more, shall be stabilized with seeding and mulching or other approved means within seven (7) days. All disturbed areas within fifty (50) feet of an intermittent or solid blue line stream shall be stabilized within two (2) days. All areas of a site which are at final grade shall be stabilized with seeding and mulching or other approved means within seven (7) days.
5. Quantities for Erosion Control may vary between detailed plans and field conditions during construction. Plan quantities are a minimum; more erosion control may be necessary due to environmental conditions.
6. Sedimentation control and ditch swales are subject to change upon completion of entire set of construction drawings.
7. No solid or liquid waste shall be discharged into storm water runoff.
8. Home builders are responsible for erosion control on each individual lot.
9. Contractors to accept all quantities as correct prior to beginning construction.

GRADING NOTES

1. LOCATION OF EXISTING UTILITIES TO BE DETERMINED IN THE FIELD PRIOR TO BEGINNING WORK.
2. CONTRACTOR SHALL OBTAIN A COPY OF THE COMPLETE GEOTECHNICAL REPORT PRIOR TO BIDDING THE PROJECT.
3. CONTRACTORS SHALL SET UP AN ONSITE PRE-CONSTRUCTION MEETING WITH THE BUTLER COUNTY STORM WATER DISTRICT/BCEO, DEVELOPER, PROJECT GEOTECHNICAL ENGINEER, EARTHWORK CONTRACTOR, AND SITE CIVIL ENGINEER PRIOR TO BEGINNING CONSTRUCTION.
4. CONTRACTOR SHALL ASSUME THE TOP 5" OF EXISTING GROUND IS TOPSOIL. TOPSOIL REMOVED TO DEPTHS GREATER THAN 5" SHALL BE DONE ONLY AFTER CONSULTATION WITH THE PROJECT GEOTECHNICAL ENGINEER AND APPROVAL OF THE DEVELOPER.
5. ALL EARTHWORK AND CONSTRUCTION ACTIVITY SHALL BE PERFORMED PER THE RECOMMENDATIONS OF THE PROJECT GEOTECHNICAL ENGINEER AS DESCRIBED IN THE GEOTECHNICAL EXPLORATION REPORT AND ALL ADDENDUMS.
6. CONTRACTOR SHALL VERIFY ALL EARTHWORK QUANTITIES PRIOR TO AWARD OF CONTRACT. PAY QUANTITIES ARE FINAL EXCEPT FOR DOCUMENTED UNDERCUT APPROVED BY DEVELOPER PRIOR TO COMPLETION OF THE EXTRA WORK. UPON REQUEST, CONTRACTORS MAY HAVE ACCESS TO THE SITE TO FIELD CHECK TOPOGRAPHY.
7. THE AREAS LABELED DENSE VEGETATION ARE WHERE THE EXISTING GROUND WAS OBSCURED FROM VIEW BY EXISTING VEGETATION. THE EXISTING CONTOURS SHOWN IN THIS AREA MAY VARY.

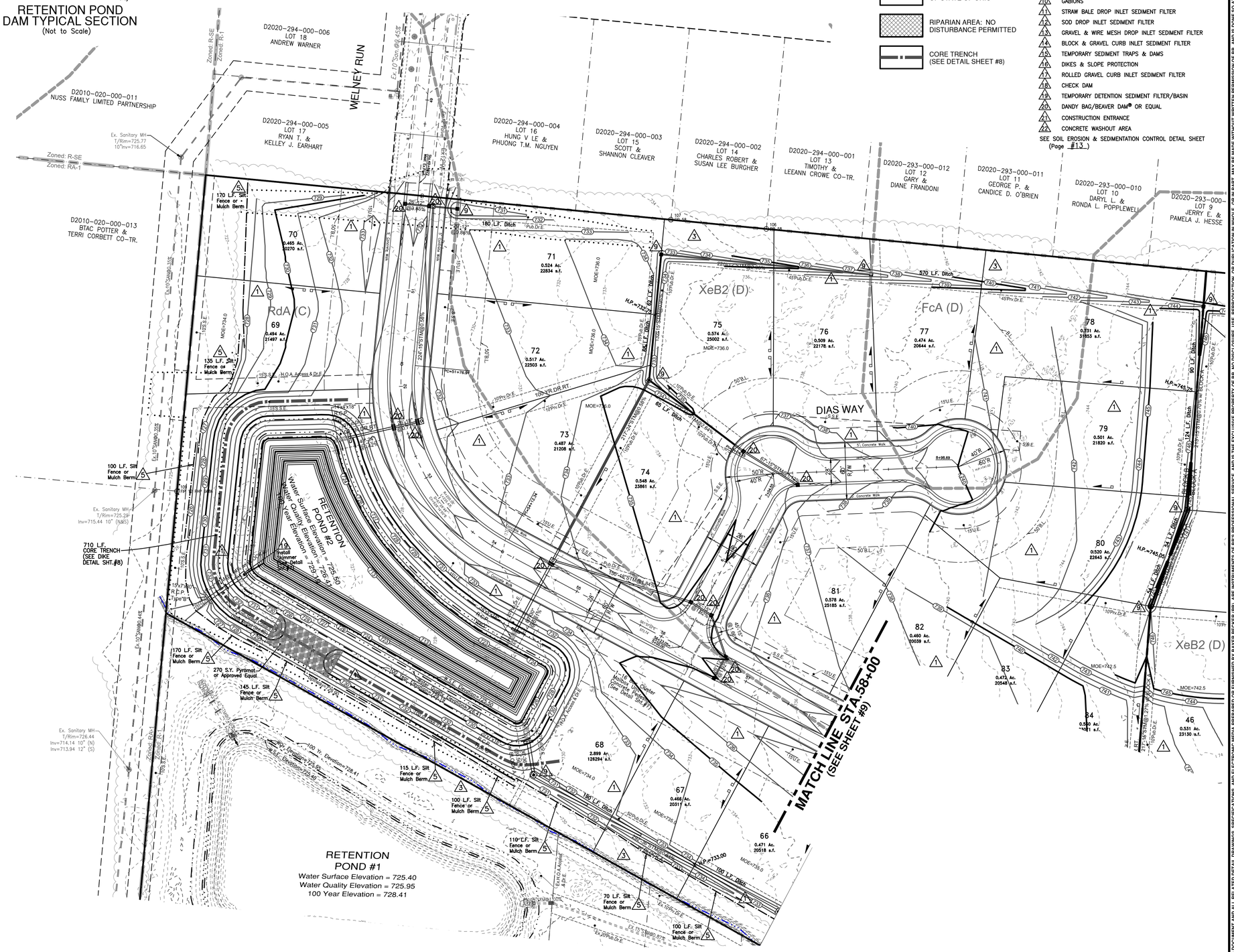

Basis of Bearing: State Plane NAD83 (2011)
SCALE: 1" = 50'

STATE OF OHIO ETTAN R. BECKER REGISTERED PROFESSIONAL ENGINEER 9-5-23

Item	Revision Description	Date	Drawn:	Chk:
1	Revised as per BCEO & Developer	7-19-23	TAC	
2	Split into Blocks A & B	8-16-23	TAC	
3				
4				
5				
6				
7				
8				
9				

CARAVEL SECTION TWO

SECTION 22, TOWN 3, RANGE 3
LIBERTY TOWNSHIP, BUTLER COUNTY, OHIO

GRADING PLAN

bayer becker
www.bayerbecker.com
6800 Tylersville Road, Suite A
Mason, OH 45040 - 513.336.6600

Drawing: 19-0168-002 CD
Drawn by: TAC
Checked By: XXX
Issue Date: 5-16-23
Sheet: 8/13

THIS DOCUMENT AND ALL RELATED DETAIL DRAWINGS, SPECIFICATIONS, AND ELECTRONIC MEDIA PREPARED OR FURNISHED BY BAYER BECKER (BB), ARE INSTRUMENTS OF BB'S PROFESSIONAL SERVICE, AND IS THE EXCLUSIVE PROPERTY OF BB. NO DISCLOSURE, USE, REPRODUCTION, OR DUPLICATION IN WHOLE, OR IN PART, MAY BE MADE WITHOUT WRITTEN PERMISSION OF BB, AND IS DONE SO AT USER'S SOLE RISK. COPYRIGHT - ALL RIGHTS RESERVED.

Plot time: Sep 05, 2023 - 3:41pm
Drawing name: J:\2019\19-0168-002\CV\DWG\19-0168-002 CD.dwg - Layout Tab: 8GR

SOIL TYPES

CLEARING LIMITS

SILT FENCE OR MULCH BERM

REGULATED WATERWAY OF STATE OF OHIO

RIPARIAN AREA: NO DISTURBANCE PERMITTED

Note: All ditches constructed by the Developer shall be sodded or hydro-seeded.

TYPICAL DITCH SECTION

TYPICAL DRAINAGE ROUTE SECTION

EROSION CONTROL NOTES

1. SEEDING AND MULCHING
2. SODDING
3. PRESERVE EXISTING VEGETATION
4. STRAW BALE
5. SILT FENCE OR MULCH BERM
6. SOIL PILES
7. TEMPORARY STREAM CROSSING
8. GRAVEL CURB INLET SEDIMENT FILTER
9. GEOTEXTILE INLET SEDIMENT FILTER
10. GABIONS
11. STRAW BALE DROP INLET SEDIMENT FILTER
12. SOD DROP INLET SEDIMENT FILTER
13. GRAVEL & WIRE MESH DROP INLET SEDIMENT FILTER
14. BLOCK & GRAVEL CURB INLET SEDIMENT FILTER
15. TEMPORARY SEDIMENT TRAPS & DAMS
16. DIKES & SLOPE PROTECTION
17. ROLLED GRAVEL CURB INLET SEDIMENT FILTER
18. CHECK DAM
19. TEMPORARY DETENTION SEDIMENT FILTER/BASIN
20. DANDY BAG/BEAVER DAM® OR EQUAL
21. CONSTRUCTION ENTRANCE
22. CONCRETE WASHOUT AREA

SEE SOIL EROSION & SEDIMENTATION CONTROL DETAIL SHEET (Page #13)

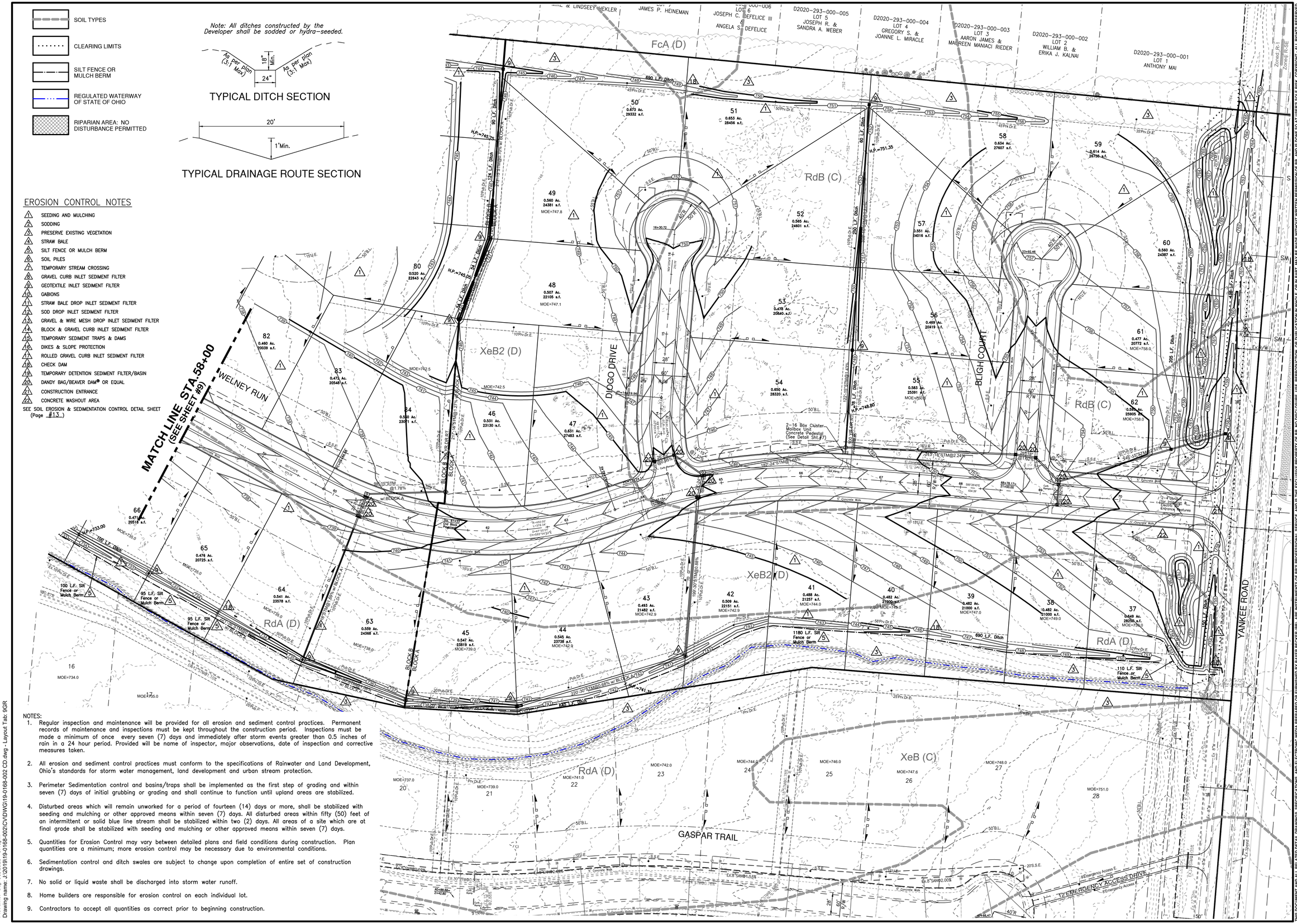

NOTES:

1. Regular inspection and maintenance will be provided for all erosion and sediment control practices. Permanent records of maintenance and inspections must be kept throughout the construction period. Inspections must be made a minimum of once every seven (7) days and immediately after storm events greater than 0.5 inches of rain in a 24 hour period. Provided will be name of inspector, major observations, date of inspection and corrective measures taken.
2. All erosion and sediment control practices must conform to the specifications of Rainwater and Land Development, Ohio's standards for storm water management, land development and urban stream protection.
3. Perimeter Sedimentation control and basins/traps shall be implemented as the first step of grading and within seven (7) days of initial grubbing or grading and shall continue to function until upland areas are stabilized.
4. Disturbed areas which will remain unworked for a period of fourteen (14) days or more, shall be stabilized with seeding and mulching or other approved means within seven (7) days. All disturbed areas within fifty (50) feet of an intermittent or solid blue line stream shall be stabilized within two (2) days. All areas of a site which are at final grade shall be stabilized with seeding and mulching or other approved means within seven (7) days.
5. Quantities for Erosion Control may vary between detailed plans and field conditions during construction. Plan quantities are a minimum; more erosion control may be necessary due to environmental conditions.
6. Sedimentation control and ditch swales are subject to change upon completion of entire set of construction drawings.
7. No solid or liquid waste shall be discharged into storm water runoff.
8. Home builders are responsible for erosion control on each individual lot.
9. Contractors to accept all quantities as correct prior to beginning construction.

Basis of Bearing: State Plane NAD83 (2011)

SCALE: 1" = 50'

STATE OF OHIO — ETHAN A. CREECH — 9-5-23 — REGISTERED PROFESSIONAL ENGINEER

Item	Revision Description	Date	Drwn:	Chk:
1	Revised as per BCEO & Developer	7-19-23	TAC	
2	Split into Blocks A & B	8-18-23	TAC	
3	Added Entrance Wall & Adjusted Storm and Grading	9-5-23	TAC	
4				
5				
6				
7				
8				
9				

CARAVEL SECTION TWO

SECTION 22, TOWN 3, RANGE 3
LIBERTY TOWNSHIP, BUTLER COUNTY, OHIO

GRADING PLAN

bayer becker
www.bayerbecker.com
6900 Tylersville Road, Suite A
Mason, OH 45040 - 513.336.6600

Drawing: 19-0168-002 CD
Drawn by: TAC
Checked By: XXX
Issue Date: 5-16-23
Sheet: 9/13

THIS DOCUMENT AND ALL RELATED DETAIL DRAWINGS, SPECIFICATIONS, AND ELECTRONIC MEDIA PREPARED OR FURNISHED BY BAYER BECKER (BB), ARE INSTRUMENTS OF BB'S PROFESSIONAL SERVICE, AND IS THE EXCLUSIVE PROPERTY OF BB. NO DISCLOSURE, USE, REPRODUCTION, OR DUPLICATION IN WHOLE, OR IN PART, MAY BE MADE WITHOUT WRITTEN PERMISSION OF BB, AND IS DONE SO AT USER'S SOLE RISK. COPYRIGHT - ALL RIGHTS RESERVED.

Plot time: Sep 05, 2023 - 3:43pm
Drawing name: J:\2019\19-0168-002\CV\DWG\19-0168-002 CD.dwg - Layout Tab: 9GR

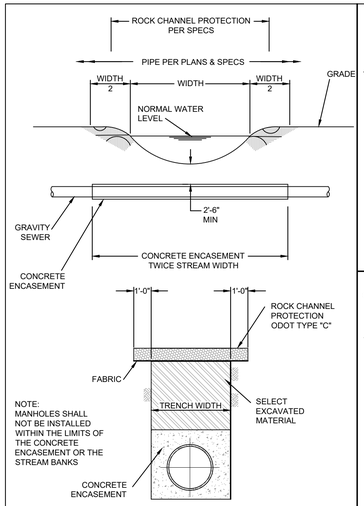

TYPICAL CREEK CROSSING FOR GRAVITY SEWERS

6260

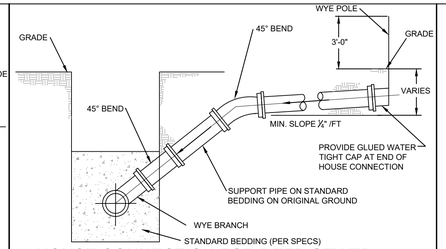

HOUSE CONNECTION FOR DEEP SEWER

6280

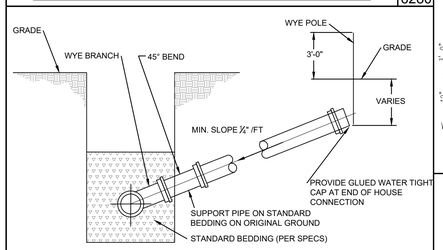

HOUSE CONNECTION FOR SHALLOW SEWER

6290

SETTLEMENT REPAIR

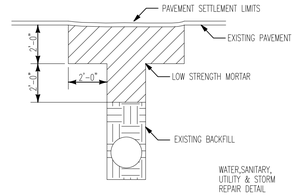

TRENCH 4' OR GREATER IN DEPTH

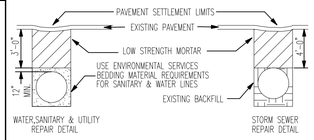

TRENCH 4' OR LESS IN DEPTH

ITEM SPECIAL – LOW STRENGTH MORTAR BACKFILL MATERIAL

DESCRIPTION: THIS WORK SHALL CONSIST OF THE PLACEMENT OF A FLOWABLE MIXTURE OF PORTLAND CEMENT, FLY ASH, AND SAND FOR BACK-FILLING CONDUIT OR AT OTHER LOCATIONS AS SHOWN ON THE PLANS OR AS SPECIFIED. THE WORK SHALL BE IN ACCORDANCE WITH ODOT ITEMS 603 AND 499 UNLESS OTHERWISE SPECIFIED HEREIN.

MATERIALS: MATERIALS SHALL BE:
A. CEMENT 701.01 OR 701.04
B. FLY ASH SHALL MEET ASTM C-618
C. FINE AGGREGATE SHALL BE NEUTRAL SAND OR SAND MANUFACTURED FROM STONE, GRAVEL, OR AIR-COOLED SLAG. THE GRADUATION OF THE SAND SHALL MEET THE REQUIREMENTS OF 703.05. THE SAND SHALL BE FINE ENOUGH TO STAY IN SUSPENSION IN THE MIXTURE TO THE EXTENT REQUIRED FOR PROPER FLOW. THE ENGINEER RESERVES THE RIGHT TO REJECT THE SAND IF THE FLOWABLE MIXTURE CANNOT BE PRODUCED.
D. WATER USED FOR MORTAR BACKFILL SHALL BE FREE FROM OIL, ACID, STRONG ALKALIDIES OR VEGETABLE MATTER.
E. SLUMPS MEASURED IN THE ORDINARY WAY WILL BE 8" OR HIGHER FOR PROPER PLACEMENT OF THE FLOWABLE MATERIAL.

MORTAR MIX PROPORTIONING: THE INITIAL TRIAL MIXTURE SHALL CONSIST OF THE FOLLOWING QUANTITIES OF MATERIALS PER CUBIC YARD:

CLASS LSM – 50	
CEMENT	50 LBS.
FLY ASH	250 LBS.
SAND	2910 LBS.
WATER (TARGET)	500 LBS.

ADJUSTMENTS TO THE PROPORTIONS MAY BE MADE BY THE ENGINEER PROVIDING THE TOTAL ABSOLUTE VOLUME OF THE MATERIALS IS MAINTAINED. THIS ITEM WILL BE INCLUDED IN THE STANDARD 603 INSULATION, THIS WILL NOT BE AN ADDITIONAL PAY ITEM, BUT REPLACEMENT FOR THE NORMAL BACKFILL.

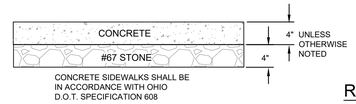

CONCRETE SIDEWALKS SHALL BE IN ACCORDANCE WITH OHIO D.O.T. SPECIFICATION 608

SIDEWALK RESTORATION DETAIL

4010

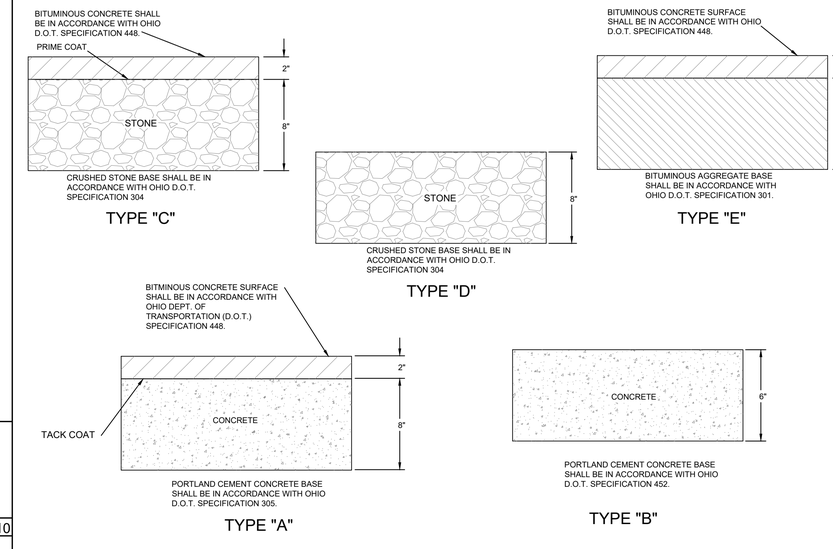

PAVEMENT REPLACEMENT DETAILS

4120

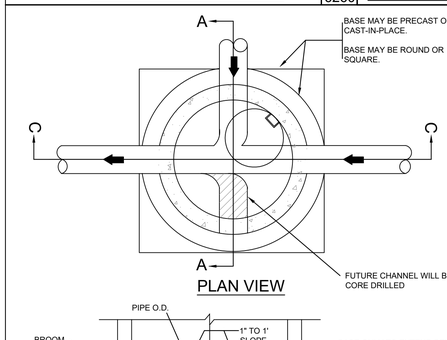

PLAN VIEW

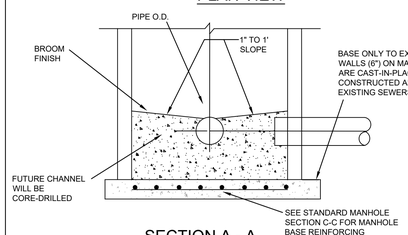

SECTION A - A

STANDARD CAST IN-PLACE MANHOLE

6130

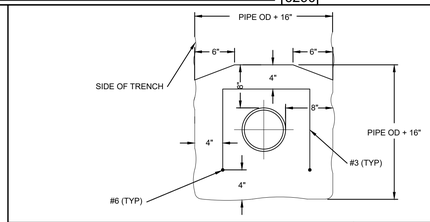

PIPE SIZE	CY CONC PER LIN FT	LENGTH OF NO 3 BARS	SPACING (FT) BETWEEN NO 3 BARS
6"	0.121	3'-9"	1.64
8"	0.139	4'-3"	1.25
10"	0.157	4'-9"	1.12
12"	0.177	5'-3"	1.02
16"	0.200	6'-3"	0.85
18"	0.247	6'-10"	0.78
20"	0.270	7'-5"	0.72
24"	0.315	8'-6"	0.63
30"	0.540	10'-0"	0.57

CONCRETE ENCASEMENT DETAIL

6240

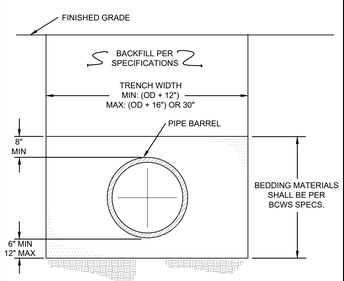

TYPICAL TRENCH DETAIL SEWER INSTALLATION

6270

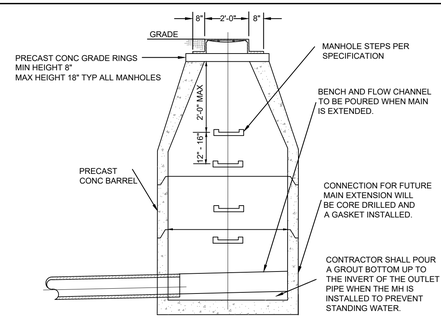

DEAD END MANHOLE DETAIL

6190

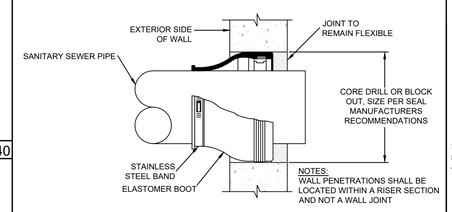

CONNECTION TO EXISTING MANHOLE

6150

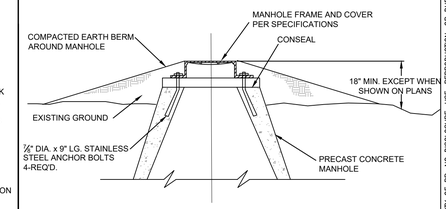

ELEVATED MANHOLE DETAIL

6170

NOTE:

1) THE CARRIER PIPE SHALL BE BRACED WITHIN THE CASING PIPE WITH CASING SPACERS THAT PLACE THE CARRIER PIPE IN A "RESTRAINED" POSITION TO PRECLUDE POSSIBLE FLOATATION WHILE PROVIDING 1/2-1" CLEARANCE BETWEEN THE TOP RUNNERS AND THE CASING PIPE.

2) CASING SPACERS SHALL BE INSTALLED WITHIN ONE (1) FOOT OF EACH SIDE OF CARRIER PIPE JOINTS, WITHIN ONE (1) FOOT OF EACH END OF THE CASING PIPE AND ON 6 FOOT CENTERS THEREAFTER.

3) THERE SHALL BE TWO (2) RUNNERS ON TOP AND TWO (2) RUNNERS ON BOTTOM OF CASING SPACER FOR CARRIER PIPE DIAMETERS OF 4-12" OR TWO (2) RUNNERS ON TOP AND FOUR (4) RUNNERS ON BOTTOM FOR CARRIER PIPE DIAMETERS OF 14-36".

4) AT EACH END OF THE CASING PIPE, THE CARRIER AND CASING PIPE SHALL BE WRAPPED WITH END SEALS.

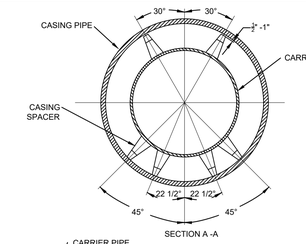

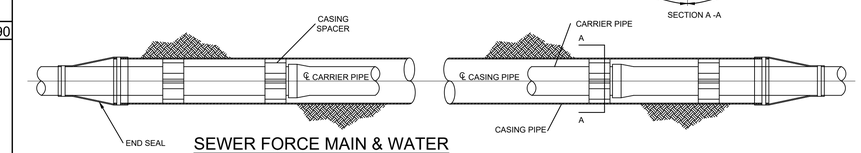

SEWER FORCE MAIN & WATER MAIN ENCASEMENT DETAIL

4370

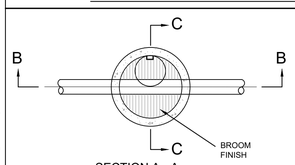

SECTION A - A

M.H. DEPTH	SLAB & DOWELL RESTEEL SQ. IN./FT. E.W.
0'-10'	0.17
11'-20'	0.22
21'-30'	0.27
31'-40'	0.32

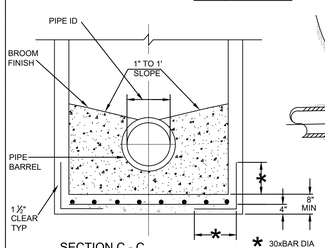

SECTION C - C

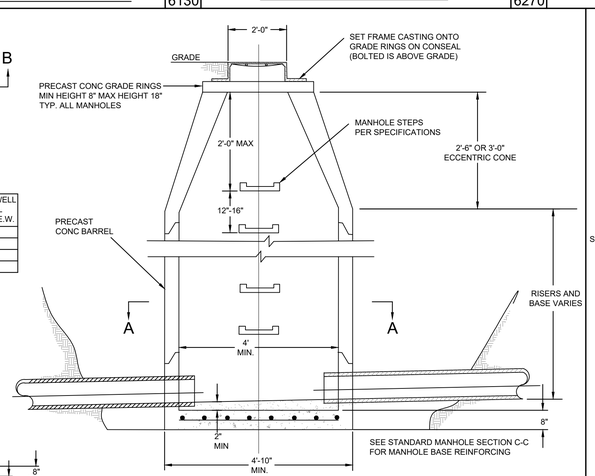

SECTION B - B

STANDARD MANHOLE

6200

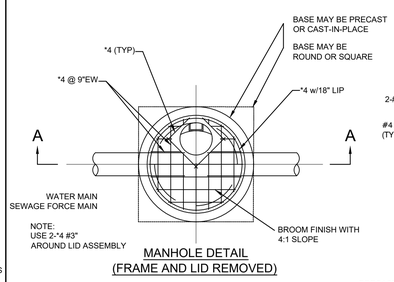

MANHOLE DETAIL (FRAME AND LID REMOVED)

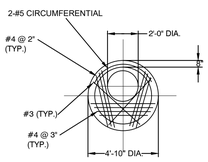

CONCRETE TOP SLAB

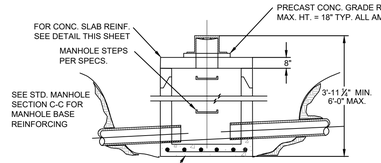

MANHOLE WITH SLAB TOP SECTION A-A

MANHOLE WITH WITH SLAB TOP DETAIL

6210

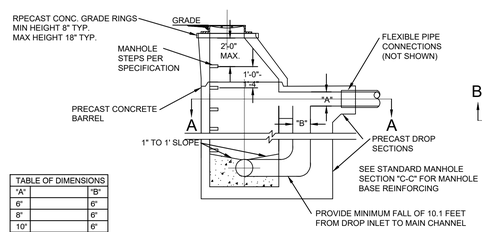

TABLE OF DIMENSIONS	
"A"	"B"
6"	6"
8"	6"
10"	6"
12"	8"
15"	8"
18"	10"
21"	10"
24"	12"
27"	15"
30"	18"

OUTSIDE DROP MANHOLE SECTION "B-B"

DROP MANHOLES SHALL BE USED WHEN THE DIFFERENCE IN ELEVATION BETWEEN THE INVERT OF THE INLET AND THE OUTLET PIPE EXCEEDS 2.0 FEET

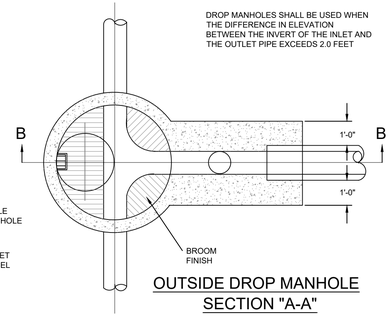

OUTSIDE DROP MANHOLE SECTION "A-A"

OUTSIDE DROP MANHOLE DETAIL

6140

THIS DOCUMENT AND ALL RELATED DETAIL DRAWINGS, SPECIFICATIONS, AND ELECTRONIC MEDIA PREPARED OR FURNISHED BY BAYER BECKER (BB), ARE INSTRUMENTS OF BB'S PROFESSIONAL SERVICE, AND IS THE EXCLUSIVE PROPERTY OF BB. NO DISCLOSURE, USE, REPRODUCTION, OR DUPLICATION IN WHOLE, OR IN PART, MAY BE MADE WITHOUT WRITTEN PERMISSION OF BB, AND IS DONE SO AT USER'S SOLE RISK. COPYRIGHT – ALL RIGHTS RESERVED.

Item	Revision Description	Date	Drwn:	Chk:

BUTLER COUNTY, OHIO

MISCELLANEOUS & SANITARY DETAILS

bayer becker
www.bayerbecker.com
6070 Tower Blvd., Suite A
Mason, Ohio 45040 513.338.6600

Drawing: BC SAN
Drawn by:
Checked By:
Issue Date: 12-28-17
Sheet: 10/13

Plot time: Dec 21, 2022 – 9:01am
Drawing name: K:\OLD-K\Mason\~FF\BLOCKS\DETAILS\BUTLER\BC SAN.dwg – Layout Tab: SAN

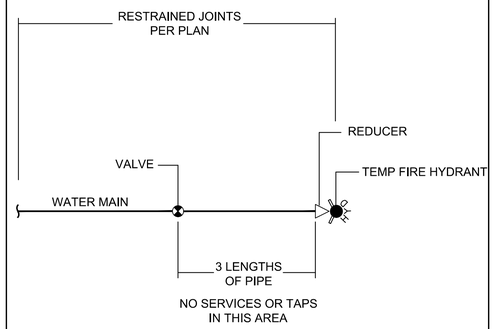

DEAD END DETAIL WITH TEMPORARY FIRE HYDRANT

5140

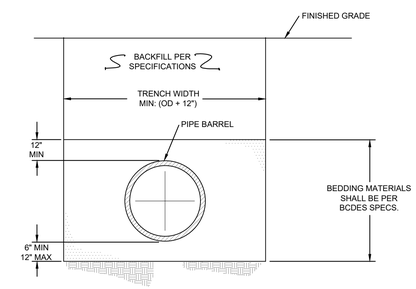

TYPICAL TRENCH DETAIL WATER MAIN INSTALLATION

5280

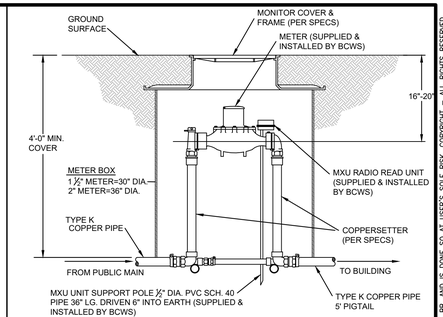

METER TYPE	LAYING LENGTH
1 1/2" C2 OMNI	13"
1 1/2" T2 OMNI	13"
2" C2 OMNI AS SUPPLIED BY BUTLER COUNTY SEE NOTE 3	17"
2" C2 OMNI FACTORY ORDERED	15 1/2"
2" T2 OMNI	17"

NOTE:
1) FOR METERS 3" AND LARGER, REFER TO THE STD. INSTALLATION FOR 3" AND LARGER WATER METERS.

2) ALL DOMESTIC WATER METERS SHALL BE SENSUS OMNI C2 TYPES FOR SIZES OF 1 1/2" AND LARGER. NON-DOMESTIC , (IE: DEDUCT, IRRIGATION), MAY BE EITHER SENSUS OMNI T2 OR C2 TYPES FOR SIZES OF 1 1/2" AND LARGER.

3) BUTLER COUNTY ORDERS 2" C2 OMNI METERS WITH A 17" LAYING LENGTH TO ACCOMODATE THE STANDARD COPPERSETTER. IF THE FACTORY ORDERED SIZE IS UTILIZED AN ADAPTER FLANGE PLATE WILL BE REQUIRED.

STANDARD INSTALLATION FOR 1-1/2" & 2" WATER METER SETTINGS

5170

NOTE:
FOR WATER MAINS ONLY:
MODIFICATIONS FROM THIS DETAIL
MAY BE NECCESSARY IF WATER WIDTH
IS GREATER THAN 15'-0" (SEE SPECS)

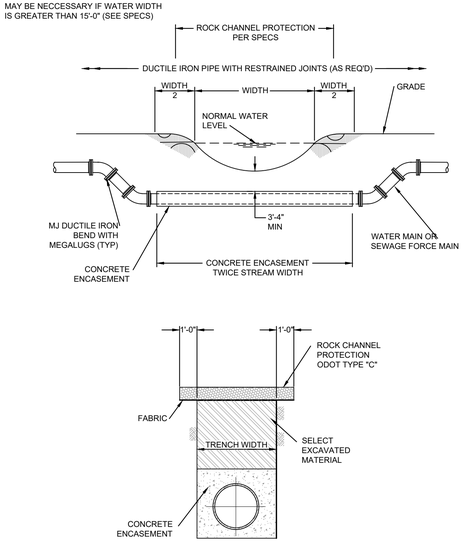

TYPICAL CREEK CROSSING & TRENCH DETAIL FOR WATER & SEWER FORCE MAINS

4170

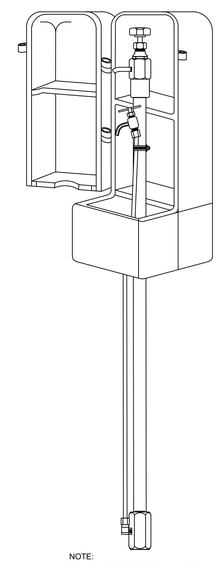

STATION SHALL BE ENCLOSED IN A LOCKABLE, NON-REMOVABLE ALUMINUM BOX WITH HINGED OPENINGS.

ALL WORKING PARTS SHALL BE OF STAINLESS STEEL AND SERVICABLE FROM ABOVE GROUND WITH NO DIGGING OR REPLACEMENT NEEDED.

THE STATION SHALL BE MODEL #88-SS AS MANUFACTURED BY THE KUPFERLE FOUNDARY, ST. LOUIS MO. OR APPROVED EQUAL.

NOTE:
SAMPLING STATIONS SHALL BE INSTALLED PER BCWS SPECS.

PERMANENT LAB SAMPLING STATION

5270

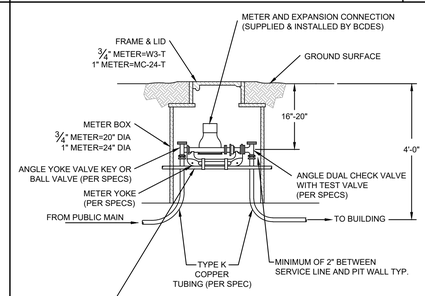

SUPPORT BRACKET & STAINLESS STEEL HOSE CLAMPS TO BE USED WHEN THE SERVICE PIPE ON THE BUILDING SIDE OF THE SUPPLY IS NOT COPPER TUBING AS REQUIRED ON THE PUBLIC MAIN SIDE OF THE PIT.

SUPPORT BRACKET SHOULD BE A MINIMUM OF 3/4" PVC PENETRATING BOTH SIDES OF THE PIT WALL AND ATTACHED SECURELY TO THE BOTTOM OF THE YOKE BAR.

STANDARD INSTALLATION FOR 3/4" AND 1" WATER METER SETTINGS

5150

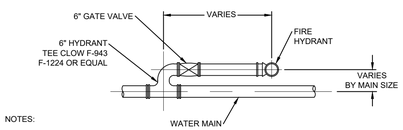

NOTES:

1.) FITTINGS TO BE MECHANICAL JOINT HYDRANT ANCHOR FITTINGS.

2.) SEE TYPICAL FIRE HYDRANT INSTALLATION DETAIL FOR ADDITIONAL DETAILS (#5110)

SETTING FOR HYDRANT ADJACENT TO MAIN

5120

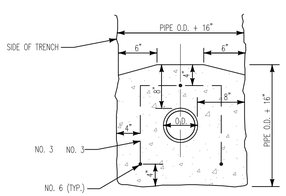

PIPE SIZE	C.Y. CONC. PER LIN. FT.	LENGTH OF NO. 3 BARS	SPACING (FT) BETWEEN NO. 3 BARS
6"	0.121	3'-9"	1.64
8"	0.139	4'-3"	1.25
10"	0.157	4'-9"	1.12
12"	0.177	5'-3"	1.02
16"	0.200	6'-3"	0.85
18"	0.247	6'-10"	0.78
20"	0.270	7'-5"	0.72
24"	0.315	8'-6"	0.63
30"	0.540	10'-0"	0.57

CONCRETE ENCASEMENT

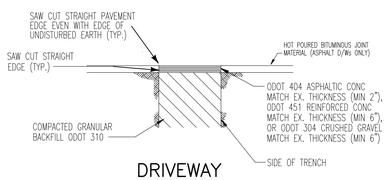

DRIVEWAY

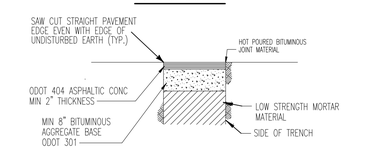

ASPHALTIC CONCRETE ROADWAY

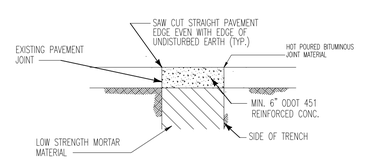

CONCRETE ROADWAY

PAVEMENT REPLACEMENT DETAILS

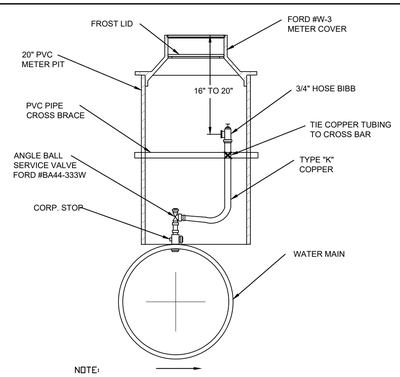

NOTE:

1) PIPE LESS THAN OR EQUAL TO 12"ø MUST USE 3/4" CORP. STOP, ANGLE BALL VALVE AND SERVICE PIPE.

2) PIPE GREATER THAN 12"ø TO USE 1" CORP. STOP, ANGLE BALL VALVE AND SERVICE PIPE.

AIR RELEASE VALVE DETAIL

5290

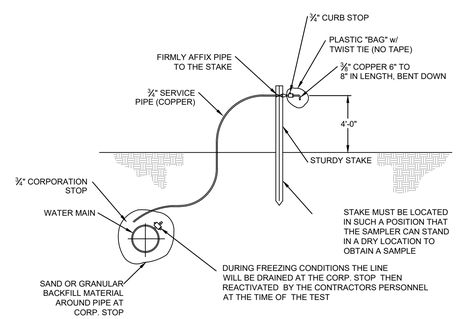

TEMPORARY PURITY TEST STATION

5260

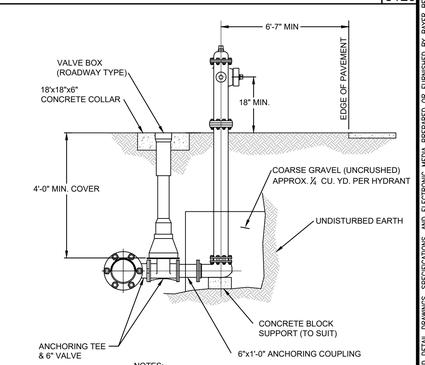

NOTES:

1.) VERIFY LOCATION OF F.H. RELATIVE TO WATER MAIN ON PLANS.

2.) CHECK STREET DETAILS FOR RELATIONSHIP BETWEEN MAIN, STREET AND F.H.

TYPICAL FIRE HYDRANT INSTALLATION

5110

THIS DOCUMENT AND ALL RELATED DETAIL DRAWINGS, SPECIFICATIONS, AND ELECTRONIC MEDIA PREPARED OR FURNISHED BY BAYER BECKER (BB), ARE INSTRUMENTS OF BB'S PROFESSIONAL SERVICE, AND IS THE EXCLUSIVE PROPERTY OF BB. NO DISCLOSURE, USE, REPRODUCTION, OR DUPLICATION IN WHOLE, OR IN PART, MAY BE MADE WITHOUT WRITTEN PERMISSION OF BB, AND IS DONE SO AT USER'S SOLE RISK. COPYRIGHT – ALL RIGHTS RESERVED.

Item	Revision Description	Date	Drwn:	Chk:

BUTLER COUNTY, OHIO

WATER DETAILS

bayer becker
www.bayerbecker.com
6900 Tylersville Road Suite A
Mason, Ohio 45040 - 513.336.6600

Drawing: BC WAT
Drawn by:
Checked By:
Issue Date: 2019
Sheet: 11/13

Plot time: Dec 21, 2022 – 9:02am
Drawing name: K:\OLD-K\Mason\~FF\BLOCKS\DETAILS\BUTLER\BC WAT.DWG – Layout Tab: WAT

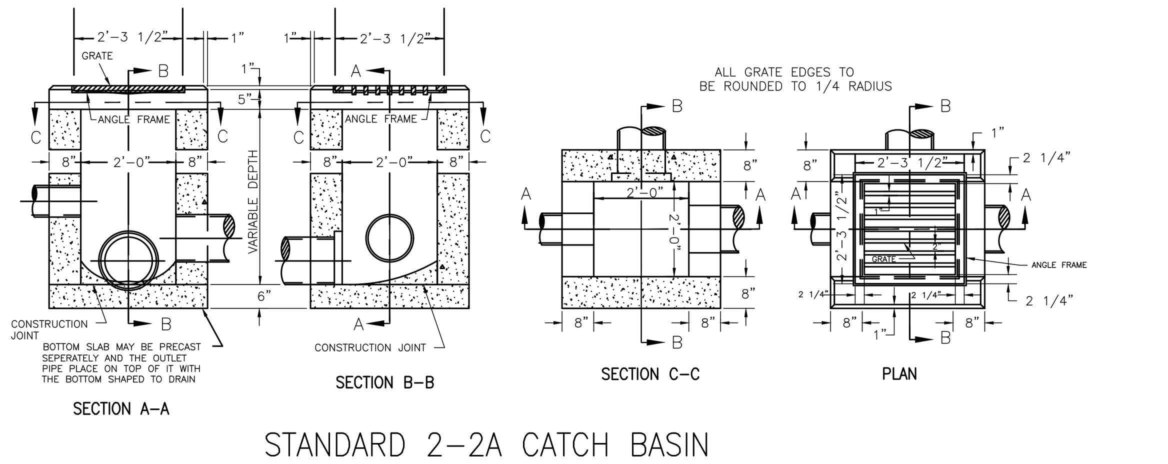

SECTION A-A SECTION B-B SECTION C-C PLAN

STANDARD 2-2A CATCH BASIN

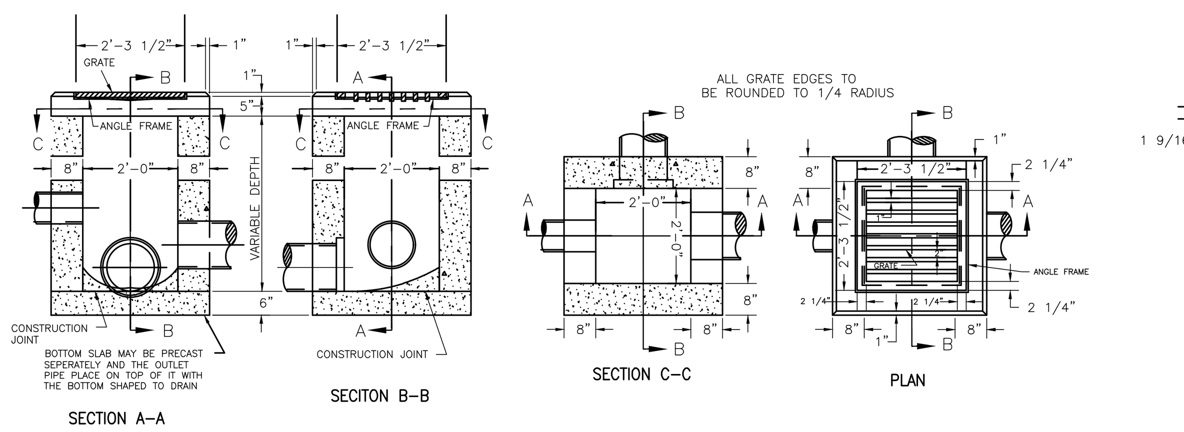

SECTION A-A SECITON B-B SECTION C-C PLAN

STANDARD NO. 2-2B CATCH BASIN

NOTES

GRATING AND FRAME: Shall meet the requirements of 604. The design shall be essentially the same and equally as strong as the one shown hereon.
Weight of grate, minimum , 120 lbs.
Weight of frame, minimum, 40 lbs.
CONCRETE: Cast in place to be class "C".
BRICK OR CONCRETE BLOCK: Side walls, when used in place of concrete, shall be 8 inches nominal thickness. When catch basin above the flow line of the side opening shall be constructed of Portland Cement Concrete.
No. 2-2A: Side inlets to be placed 4 to 6 inches below normal elevations of median or ditch flow line, returning to normal 10 feet each side of the basin.
No. 2-2B: Grate elevation to be placed 4 to 6 inches below normal ditch returning to normal 10 feet each side of basin.
SIDE INLETS: Shall be provided on both sided of the No. 2-2A catch basin in sags and on upstream side only where the ditch has a continuous down grade past the catch basin.
MAXIMUM PIPE SIZE IS 21".
MAXIMUM DEPTH IS 4 FEET.
STEPS: Steps are to be installed in storm structures over 4' in depth and shall meet the requirements of drawing MH-1.

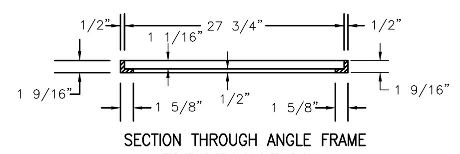

SECTION THROUGH ANGLE FRAME
FOR STANDARD 2-2A CATCH BASIN

REVISIONS	DATE	C-10
		CATCH BASIN CB 2-2A CB 2-2B
		CHK. BY: C.A.H. EFFECTIVE DATE: 1-1-94
		BUTLER COUNTY ENGINEERS OFFICE AND OPERATIONS FACILITY 1921 FAIRGROVE AVENUE - HAMILTON, OHIO 45011 PHONE 867-5744

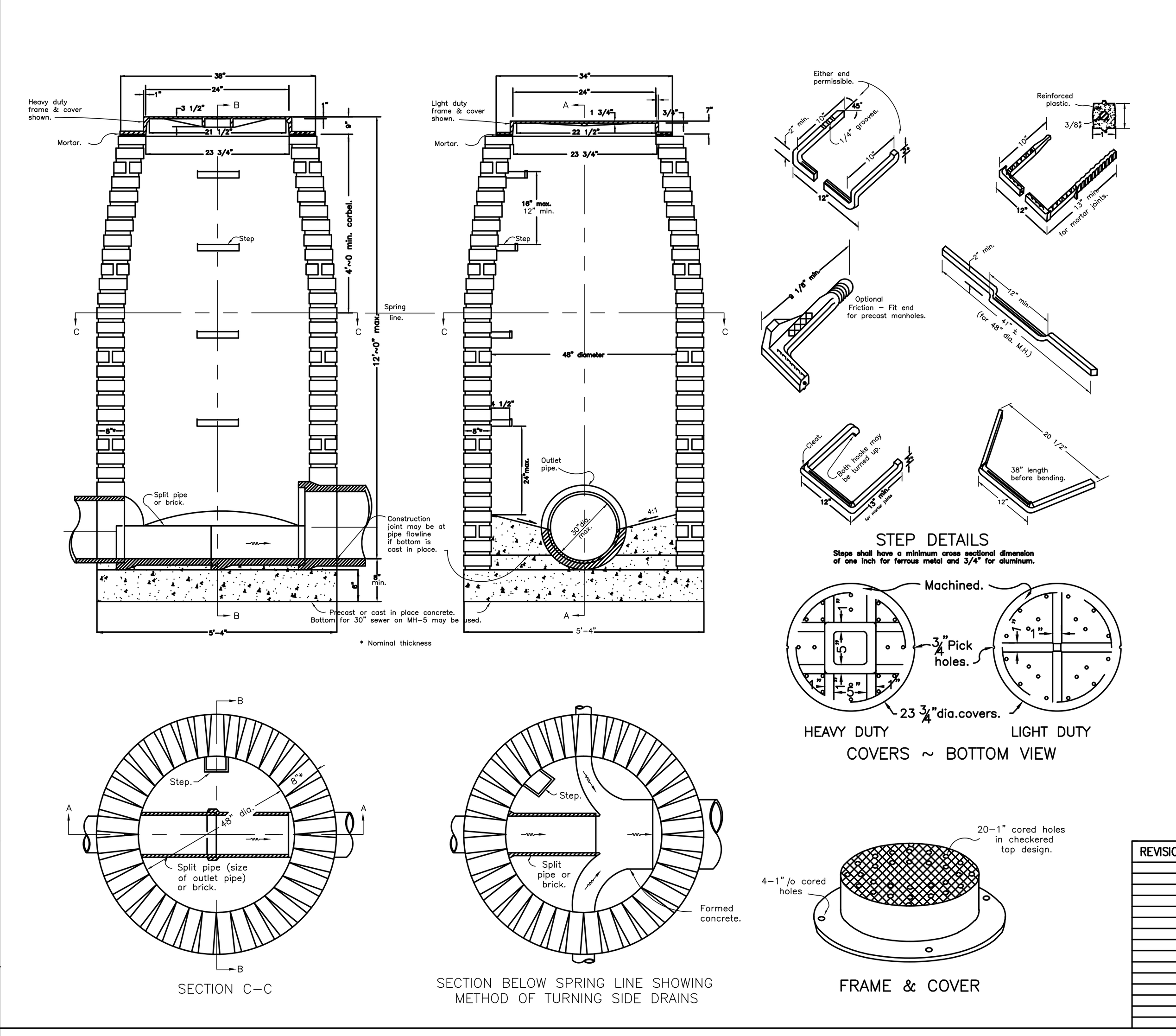

STEP DETAILS
Steps shall have a minimum cross sectional dimension of one inch for ferrous metal and 3/4" for aluminum.
HEAVY DUTY LIGHT DUTY
COVERS ~ BOTTOM VIEW
SECTION C-C
SECTION BELOW SPRING LINE SHOWING METHOD OF TURNING SIDE DRAINS
FRAME & COVER

NOTES

CONSTRUCTION: No.1 manhole is for sewers 30" diameter or less. The design shown is for brick construction with every sixth course a stretcher course. The 6" bottom may be precast or cast in place concrete. The bottom channel sections shall be built with concrete and lined with split pipe or brick except curved channels may be formed in the concrete.
Precast solid concrete radial blocks or cast in place concrete reinforced with No.4 bars on 12" centers both vertically and horizontally, may be used with a wall thickness of 6" or greater. Precast manholes detailed on MH-3 or MH-5 may be used in lieu of the design shown hereon unless otherwise required by the plans.
FRAME AND COVERS shall be of heavy design (475 lbs. min. total weight) when the manhole is placed within the limits of the pavement or shoulder, otherwise the light design shall be finished smooth and fitted so as to provide a firm and even seat to all portions of the cover in the frame. Each cover shall seat in its frame without rocking and shall be marked as a matched frame and cover before delivery to the project. The base of the frame shall be set in a full bed of Portland cement mortar, and so adjusted to conform to the finished pavement or shoulder elevation and slope. Castings meeting Item 604 requirements and designed essentially the same and equally as strong those shown hereon shall be provided.
STEPS shall conform to the material requirements of specification 604. All steps shall have a depressed tread or a 1/2" minimum cleat height at the ends. Steps installed in fresh concrete shall be embedded to minimum depth of 4". Steps installed in mortar joints shall be embedded to a minimum depth of 7". Friction-fit steps meeting the requirements of 711.31 with a 1/2" diameter rebar may be used in precast manholes. The receiving holes for friction-fit steps shall not penetrate the manhole wall.
The Engineer may require the contractor to test load a maximum of one step per manhole to a proof load of 400 lbs. in direct pull. The equipment and method used shall meet the approval of the Engineer. If the selected step fails the pullout test, the remaining steps in that manhole shall also be tested. All steps not passing the pullout test shall be removed and a new step installed and tested to the satisfaction of the Engineer. Cost of testing shall be incidental to the unit price bid for the manhole.
DROP PIPE, when specified on the plans, shall be constructed as shown on MH-2.
SANITARY SEWER COVERS shall be without the pick and vent holes shown hereon and shall include a sealing gasket affixed to the bearing surface. Bolt-down covers shall not be used unless specified in the plans.

REVISIONS	DATE	
		TYPICAL MANHOLE DETAIL MH-1
		CHK. BY: C.A.H. EFFECTIVE DATE: 1-1-94
		BUTLER COUNTY ENGINEERS OFFICE AND OPERATIONS FACILITY 1921 FAIRGROVE AVENUE - HAMILTON, OHIO 45011 PHONE 867-5744

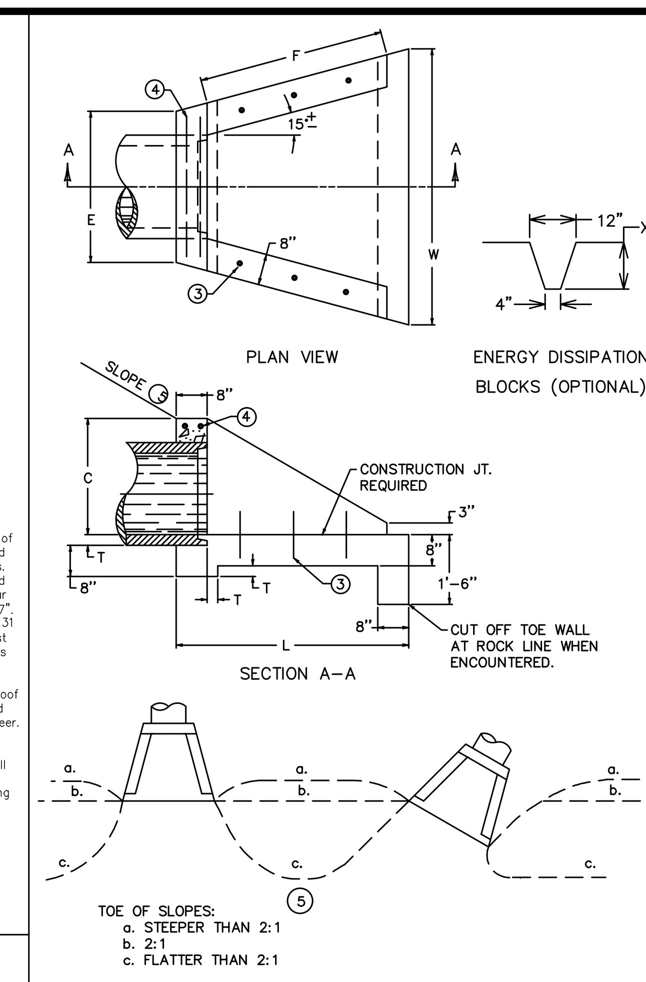

PLAN VIEW
ENERGY DISSIPATION BLOCKS (OPTIONAL)
SECTION A-A
TOE OF SLOPES:
a. STEEPER THAN 2:1
b. 2:1
c. FLATTER THAN 2:1

PIPE DIA. OR EQUIV. DIA.	SHAPE ⑨	C	E	F	L	W	T	X	CLASS A CONC C. Y.	REINF STEEL LBS.
12"	○	1'-9"	2'-6"	2'-3"	3'-6"	4'-0"	2"	12"	0.58	7
15"	○	2'-0"	2'-9"	2'-9"	4'-0"	4'-9"	21/4"	131/2"	0.75	
	⌓	1'-9"	3'-0"	2'-6"	3'-6"	4'-9"			0.68	
18"	○	2'-3"	3'-0"	3'-6"	4'-6"	5'-3"	21/2"	15"	0.93	8
	⌓ / ⬭	2'-0"	3'-6"	3'-0"	4'-0"	5'-6"	23/4"		0.89	
21"	○	2'-6"	3'-3"	4'-0"	5'-0"	6'-0"			1.14	
	⌓	2'-3"	3'-0"	3'-6"	4'-6"	6'-0"			1.07	9
24"	○	2'-9"	3'-6"	4'-6"	5'-6"	6'-6"	3"	18"	1.35	8
	⌓ / ⬭	2'-6"	4'-0"	4'-0"	5'-0"	6'-9"	31/4"		1.30	9
27"	○	3'-0"	3'-9"	5'-0"	6'-0"	7'-0"			1.57	
	⬭	2'-9"	4'-6"	4'-3"	5'-3"	7'-3"	31/2"		1.51	10

NOTES
1. DIMENSIONS AND QUANTITIES ARE BASED ON CONCRETE PIPE AND WILL VARY INSIGNIFICANTLY FOR CORRUGATED METAL PIPE.
2. REINFORCING STEEL : MINIMUM GRADE 40, BARS EVENLY SPACED.
③ 6 - NO. 4 x 1'-0" DOWEL BARS.
④ 2 - NO. 4 x (E DIMENSION MINUS 4").
⑤ SLOPES SHALL BE WARPED TO FIT HEADWALL WHEN PIPE IS SKEWED AND/OR NORMAL SLOPE VARIES FROM 2:1.
6. VOLUME DISPLACED BY PIPE COMPUTED USING INSIDE DIAMETER OF PIPE.
7. WING ANGLES AND/OR DIMENSIONS MAY BE ALTERED DURING CONSTRUCTION TO ACCOMMODATE FLOW OF WATER.
8. APRON BETWEEN WINGS SHALL BE SLOPED IN DIRECTION OF FLOW EQUAL TO SLOPE OF PIPE. FRONT FACE OF HEADWALL SHALL REMAIN VERTICAL.

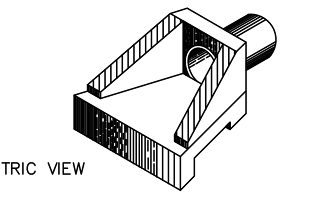

ISOMETRIC VIEW

REVISIONS	DATE	C-13A
		12" - 27" SLOPE/HILLSIDE
		CHK. BY: EJP EFFECTIVE DATE: 1-1-2010
		BUTLER COUNTY ENGINEERS OFFICE AND OPERATIONS FACILITY 1921 FAIRGROVE AVENUE - HAMILTON, OHIO 45011 PHONE 867-5744 SHEET 1 OF 6

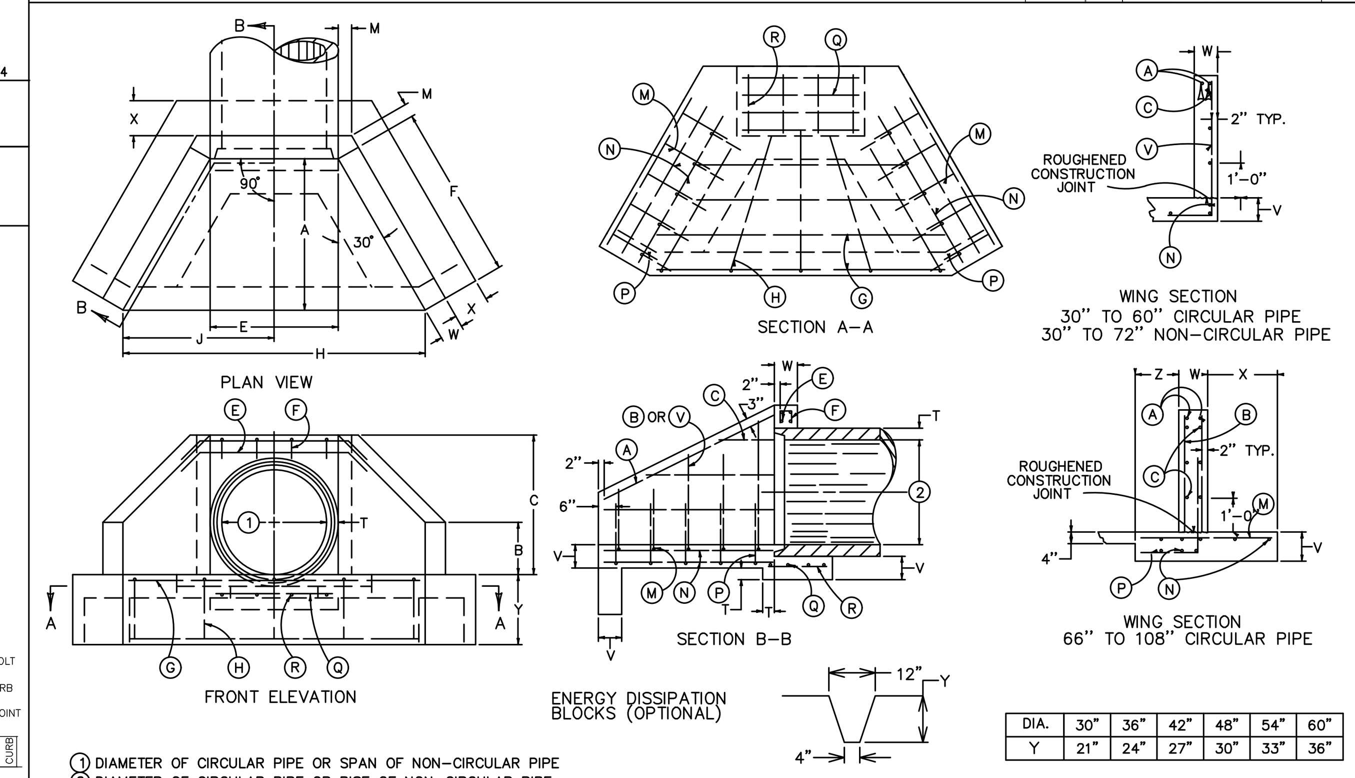

PLAN VIEW
SECTION A-A
WING SECTION 30" TO 60" CIRCULAR PIPE 30" TO 72" NON-CIRCULAR PIPE
FRONT ELEVATION
SECTION B-B
WING SECTION 66" TO 108" CIRCULAR PIPE
ENERGY DISSIPATION BLOCKS (OPTIONAL)

DIA.	30"	36"	42"	48"	54"	60"
Y	21"	24"	27"	30"	33"	36"

① DIAMETER OF CIRCULAR PIPE OR SPAN OF NON-CIRCULAR PIPE
② DIAMETER OF CIRCULAR PIPE OR RISE OF NON-CIRCULAR PIPE
3. ▭ APPLIES TO 66" DIAMETER AND GREATER. (CIRCULAR PIPE)
4. SEE CURRENT STANDARD DRAWINGS FOR DIMENSIONS, QUANTITIES, AND BILL OF REINFORCEMENT.
5. DIMENSIONS FROM FACE OF CONCRETE TO STEEL SHALL BE 2" CLEAR DISTANCE.
6. ENCIRCLED LETTERS, ◯, INDICATE STEEL BAR LOCATIONS
7. BARS Ⓑ, Ⓒ, Ⓖ, Ⓟ, Ⓜ, Ⓥ ARE SPACED 1'-0" O.C. ALL OTHER BARS SHALL BE EVENLY SPACED.
8. BARS Ⓑ AND Ⓥ ARE PLACED IN ORDER OF INCREASING LENGTHS, BEGINNING AT THE END OF EACH WING.
9. BARS Ⓒ ARE PLACED IN ORDER OF INCREASING LENGTHS, BEGINNING AT THE TOP OF EACH WING.
10. HEADWALLS LOCATED AT EDGE OF SHOULDER SHALL BE PARALLEL TO CENTERLINE OF THE ROAD.
11. APRON BETWEEN WINGS SHALL BE SLOPED IN DIRECTION OF FLOW EQUAL TO SLOPE OF PIPE. FRONT FACE OF HEADWALL AND ENDS OF WINGS SHALL REMAIN VERTICAL.

(LAYOUT AND STEEL PATTERN)

REVISIONS	DATE	
		PIPE CULVERT HEADWALLS 0 SKEW 30" - 66"
		CHK. BY: EJP EFFECTIVE DATE: 1-1-2010
		BUTLER COUNTY ENGINEERS OFFICE AND OPERATIONS FACILITY 1921 FAIRGROVE AVENUE - HAMILTON, OHIO 45011 PHONE 867-5744 SHEET 2 OF 6

DIMENSION	30"	36"	42"	48"	54"	60"	66"	DIMENSION
	DIAMETER OF PIPE							
A	3'-9"	4'-4"	4'-11"	5'-6"	6'-1"	6'-8"	7'-5"	A
B	1'-3"	1'-6"	1'-9"	2'-0"	2'-3"	2'-6"	2'-9"	B
C	3'-6"	4'-0"	4'-7"	5'-1"	5'-8"	6'-2"	7'-0"	C
E	3'-1"	3'-8"	4'-3"	4'-10"	5'-5"	6'-0"	6'-7"	E
F	4'-4"	5'-0"	5'-8"	6'-4"	7'-0"	7'-8"	8'-7"	F
H	7'-6"	8'-8"	10'-0"	11'-2"	12'-6"	13'-8"	15'-2"	H
J	3'-9"	4'-4"	5'-0"	5'-7"	6'-3"	6'-10"	7'-7"	J
M	0'-5"						0'-6"	M
T	0'-3.5"	0'-4.0"	0'-4.5"	0'-5.0"	0'-5.5"	0'-6.0"	0'-6.5"	T
V	0'-8"						1'-0"	V
W	0'-8"						0'-10"	W
X	----						2'-0"	X
Y	2'-0"						2'-6"	Y
Z	----						1'-3"	Z
CU.YDS.CONC. 2 HEADWALLS	3.36	4.30	5.35	6.53	7.82	9.22	18.76	CU.YDS.CONC. 2 HEADWALLS
LBS.STEEL 2 HEADWALLS	281	363	430	496	583	687	1320	LBS.STEEL 2 HEADWALLS

DIMENSIONS AND QUANTITIES ARE BASED ON CONCRETE PIPE AND WILL VARY SLIGHTLY FOR CORRUGATED METAL PIPE.

USE WITH SHEET 2 OF 6

REVISIONS	DATE	
		DIMENSIONS & QUANTITIES 30"-66" HEADWALLS CIRCULAR PIPE, 0 SKEW
		CHK. BY: EJP EFFECTIVE DATE: 1-1-2010
		BUTLER COUNTY ENGINEERS OFFICE AND OPERATIONS FACILITY 1921 FAIRGROVE AVENUE - HAMILTON, OHIO 45011 PHONE 867-5744 SHEET 3 OF 6

NOTE:
FOR ADDITIONAL SPECIFICATIONS ON SIZING AND BILL OF REINFORCEMENT FOR NON-CIRCULAR PIPES, SEE COMPLETE 6 PAGE DETAIL C-13A IN APPENDIX C OF THE BUTLER COUNTY SUBDIVISION REGULATIONS

BILL OF REINFORCEMENT 30" TO 66" DIAMETER CIRCULAR PIPE HEADWALLS 0° SKEW
CHK. BY: EJP EFFECTIVE DATE: 1-1-2010
BUTLER COUNTY ENGINEERS OFFICE AND OPERATIONS FACILITY SHEET 5 OF 6
USE WITH SHEET 2 OF 6

MARK	SIZE	NO ①	LGTH FT	LGTH IN	K FT	K IN
30"						
A	5	4	4	8		
C1	4	2	2	4		
C2	4	2	4	2		
E1	5	2	6	4	3	4
E2	5	2	6	8	3	8
F	4	3	1	3	0	4
G1	4	2	3	10		
G2	4	3	6	2		
H	4	4	5	1	3	5
N	4	6	4	2		
Q	4	2	2	9		
R	4	3	0	8		
V1	5	4	3	1	1	10
V2	5	4	4	1	2	10
36"						
A	5	4	5	5		
C1	4	2	1	7		
C2	4	2	3	8		
C3	4	2	4	10		
E1	5	2	6	11	3	11
E2	5	2	7	3	4	3
F	4	4	1	3	0	4
G1	4	3	5	0		
G2	4	3	7	4		
H	4	5	5	8	4	0
N	4	6	4	10		
Q	4	2	3	4		
R	4	4	0	8		
V1	5	4	3	4	2	1
V2	5	4	4	4	3	1
V3	5	2	5	4	4	1
42"						
A	5	4	6	2		
C1	4	2	2	9		
C2	4	2	4	9		
C3	4	2	5	6		
E1	5	2	7	6	4	6
E2	5	2	7	10	4	10
F	4	4	1	3	0	4
G1	4	3	6	4		
G2	4	3	8	7		
H	4	5	6	3	4	7
N	4	6	5	6		
Q	4	2	3	11		
R	4	4	0	9		
V1	5	4	3	6	2	3
V2	5	4	4	6	3	3
V3	5	4	5	6	4	3
48"						
A	5	4	6	11		
C1	4	2	1	10		
C2	4	2	3	10		
C3	4	2	5	10		
C4	4	2	6	2		
E1	5	2	8	1	5	1
E2	5	2	8	5	5	5
F	4	5	1	3	0	4
G1	4	1	4	0		
G2	4	3	7	5		
G3	4	3	9	9		
H	4	6	6	10	5	2
N	4	6	6	2		
Q	4	2	4	6		
R	4	5	0	9		
V1	5	4	3	9	2	6
V2	5	4	4	9	3	6
V3	5	4	5	9	4	6
54"						
A	5	4	7	7		
C1	4	2	0	11		
C2	4	2	3	0		
C3	4	2	5	1		
C4	4	4	6	10		
E1	5	2	8	8	5	8
E2	5	2	9	0	6	0
F	4	6	1	3	0	4
G1	4	1	5	3		
G2	4	3	8	9		
G3	4	3	11	0		
H	4	6	7	5	5	9
N	4	6	6	10		
Q	4	2	5	1		
R	4	6	0	10		
V1	5	4	4	0	2	9
V2	5	4	5	0	3	9
V3	5	4	6	0	4	9
V4	5	2	7	0	5	9
60"						
A	5	4	8	4		
C1	4	2	2	1		
C2	4	2	4	2		
C3	4	2	6	3		
C4	4	4	7	7		
E1	5	2	9	3	6	3
E2	5	2	9	7	6	7
F	4	6	1	3	0	4
G1	4	2	6	6		
G2	4	3	10	0		
G3	4	3	12	4		
H	4	7	8	0	6	4
N	4	6	7	7		
Q	4	2	5	8		
R	4	6	0	10		
V1	5	4	4	3	3	0
V2	5	4	5	3	4	0
V3	5	4	6	2	4	11
V4	5	4	7	2	5	11
66"						
A	5	4	9	4		
B1	5	8	2	10		
B2	5	8	3	10		
B3	5	8	4	9		
B4	5	8	5	9		
C1	4	4	1	5		
C2	4	4	3	5		
C3	4	4	5	6		
C4	4	4	7	7		
C5	4	8	8	4		
E1	5	2	11	9	6	10
E2	5	2	12	3	7	4
F	4	7	1	9	0	6
G1	4	3	8	0		
G2	4	3	11	4		
G3	4	3	13	10		
H	4	7	9	3	7	1
M	4	16	3	9		
N	4	14	8	4		
P	5	16	5	0	3	3
Q	5	3	6	2		
R	5	7	2	7		

NOTES
① NUMBER OF BARS IN ONE HEADWALL.
2 DIMENSIONS ARE O. TO O. OF BARS.
3 ALL BARS ARE STRAIGHT EXCEPT THOSE SHOWN BELOW.

BENT BAR SHAPES

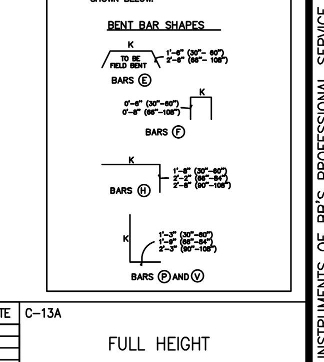

REVISIONS	DATE	C-13A
		FULL HEIGHT HEADWALLS
		BUTLER COUNTY ENGINEERS OFFICE AND OPERATIONS FACILITY 1921 FAIRGROVE AVENUE - HAMILTON, OHIO 45011 PHONE 867-5744

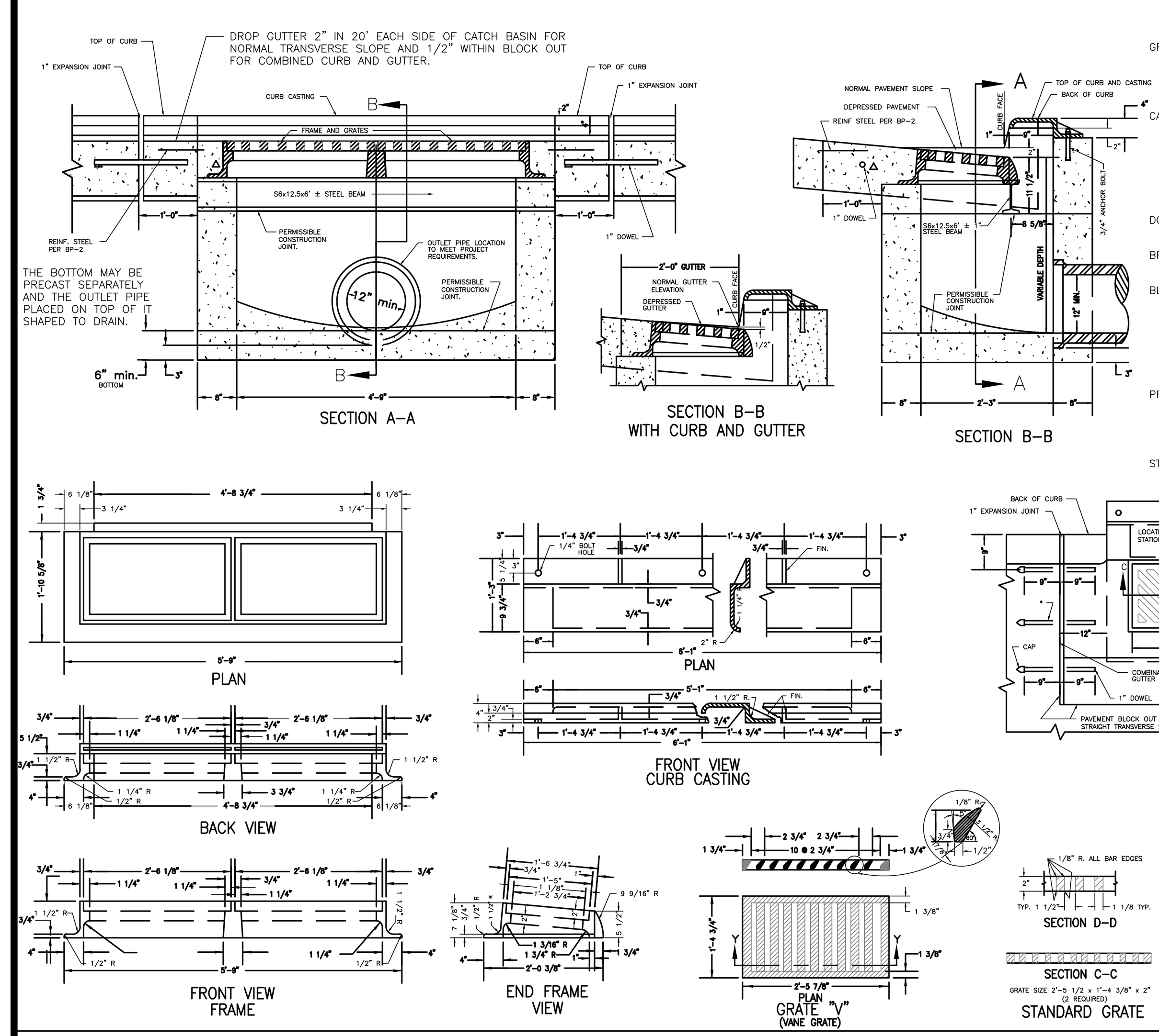

SECTION A-A
SECTION B-B WITH CURB AND GUTTER
SECTION B-B
PLAN
BACK VIEW
FRONT VIEW FRAME
FRONT VIEW CURB CASTING
END FRAME VIEW
PLAN GRATE "V" (VANE GRATE)
SECTION D-D
SECTION C-C
GRATE SIZE 2'-5 1/2 x 1'-4 3/8" x 2" (2 REQUIRED)
STANDARD GRATE

NOTES

GRATES:
STANDARD GRATE AS SHOWN IN THE PLAN VIEW SHALL BE PROVIDED UNLESS THE PLANS SPECIFICALLY REQUIRE GRATE "V". PLACE GRATE SO THE DIAGONAL BARS DIRECT DRAINAGE FLOW TOWARD THE CURB. ALL BAR EDGES TO BE ROUNDED 1/8" RADIUS.
CASTINGS:
THE DESIGN SHALL BE ESSENTIALLY THE SAME AND EQUALLY AS STRONG AS THOSE SHOWN HERON. MINIMUM WEIGHTS ARE: CURB CASTING 305 LBS., TWO GRATES 254LBS., FRAME 590 LBS., AND TWO "V" GRATES 210 LBS. BEARING AREAS OF FRAME AND GRATE SHALL BE SO FITTED AND FINISHED, WITHOUT PROJECTIONS, AS TO PROVIDE A FIRM AND EVEN SEAT FOR ALL PORTIONS OF THE GRATE IN THE FRAME WITHOUT ROCKING.
DOWELS: FOUR 1" x 18" ARE REQUIRED FOR CONCRETE PAVEMENT OF GUTTER BLOCKOUT. SEE ODOT BP-4 FOR DOWEL DETAILS.
BRICK OR CONCRETE BLOCK: SIDE WALLS WHEN USED IN PLACE OF CONCRETE, SHALL BE 8" NOMINAL THICKNESS.
BLOCKOUT: SHALL BE PAVED WITH CLASS C CONCRETE IN PCC PAVEMENT OR GUTTER AND PAID FOR AS PART OF THE PAVEMENT OR GUTTER WITH NO DEDUCTION IN PAVEMENT, CURB OR GUTTER QUANTITIES BECAUSE OF CASTINGS. A CLASS C CONCRETE APRON THE SIZE OF THE 2' GUTTER BLOCKOUT SHALL BE CAST IN PLACE IN ASPHALT PAVEMENT (NO DOWELS REQUIRED) WITH THE COST INCLUDED IN THE CATCH BASIN BID PRICE. NO DEDUCTIN TO BE MADE IN CURB QUANTITIES.
PRECAST: CONSTRUCTION IS PERMITTED, EXCEPT FOR APRON, AND CONCRETE SHALL MEET REQUIREMENTS OF 706.13 WITH 6± 2% AIR VOID CONTENT IN THE HARDENED CONCRETE. PRECAST WALLS SHALL HAVE A MINIMUM THICKNESS OF 6" AND REINFORCING SHALL BE SUFFICIENT TO PERMIT SHIPPING AND PLACEMENT WITHOUT DAMAGE.
STEPS: STEPS ARE TO BE INSTALLED IN STORM STRUCTURES OVER 4' IN DEPTH AND SHALL MEET THE REQUIREMENTS OF DRAWINGS MH-1.

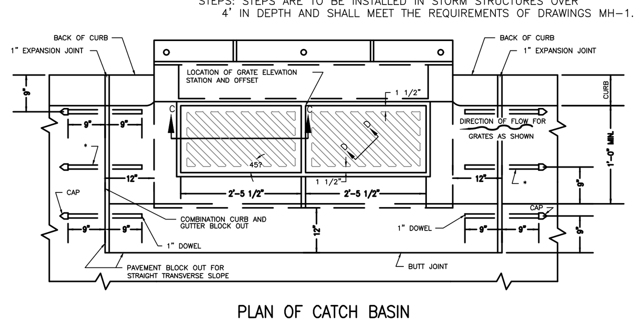

PLAN OF CATCH BASIN AND PAVEMENT JOINTS
* DOWEL LOCATION FOR CURB AND GUTTER

REVISIONS	DATE	C-6
		CATCH BASIN NO. 3
		CHK. BY: C.A.H. EFFECTIVE DATE: 1-1-94
		BUTLER COUNTY ENGINEERS OFFICE AND OPERATIONS FACILITY 1921 FAIRGROVE AVENUE - HAMILTON, OHIO 45011 PHONE 867-5744

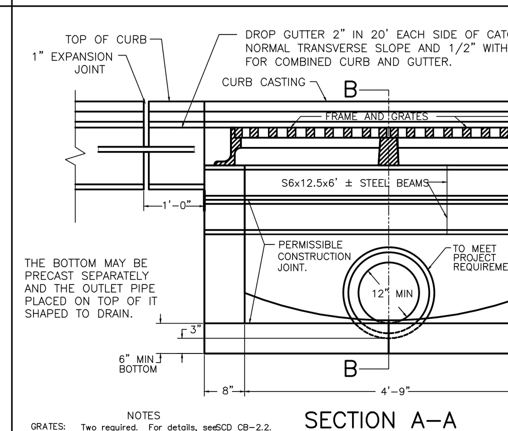

SECTION A-A

NOTES
GRATES: Two required. For details, seeSCD CB-2.2. Grate "V" shall be provided unless the plans specifically require the diagonal grate. If the diagonal grate is specified, it shall be placed so that the diagonal bars direct drainage flow toward the curb.
CASTINGS: The design shall be essentially the same and equally as strong as shown. Minimum weight [mass]:
Curb Casting . . . . . 305 lbs. [138 kg]
Two Grates . . . . . . 254 lbs. [115 kg]
Frame . . . . 590 lbs. [267 kg], and
Two Grate "V" . . . . 210 lbs. [95 kg]
Lighter weight frames and grates that meet the requirements of CMS 711.14 may also be provided. Grate openings and dimensions shall not differ from those shown, unless otherwise shown in the plans.
The following text shall be cast into the top of the curb casting:
"DUMP NO WASTE" and "DRAINS TO WATERWAY"
Text shall be printed in bold, capital letters with a minimum height of ?". See example on Plan & Section. "WATERWAY" may be substituted with "STREAM","RIVER", "LAKE", etc. Actual placement and logo may vary per manufacturer.
BEARING AREAS: The frame and grate shall be so fitted and finished as to provide a firm and even seat. No projections shall exist on bearing areas and the grate shall seat in its frame without rocking.
WALLS: When used in place of concrete, brick side walls shall be 8" [200] nominal thickness.
PRECAST CONSTRUCTION: Permitted, except for the apron. Concrete shall meet requirements of CMS 706.13. Precast walls shall have a minimum thickness of 6" [150] and reinforcing shall be sufficient to permit shipping and placement without damage. The wall thickness reduction shall be from the outside.
MINIMUM DEPTH: The minimum depth is per the cover requirements for that pipe type.
OPENINGS: Any pipe openings greater than 4" [100] from the outside of the pipe to the structure require the Engineer's approval. Fill all voids per CMS 604.
DOWELS: Four 1"x18" [25x450] dowels are required for concrete pavement or gutter blockout. See SCD BP-2.2 for dowel details.
BLOCKOUT: Blockouts shall be paved with Class C concrete in PCC pavement or gutter, and paid for as part of the pavement or gutter with no deduction in pavement, curb or gutter quantities because of the castings. A Class C concrete apron, the size of the 2'-0" [600] gutter blockout, shall be cast-in-place in asphalt pavement (no dowels required) with the cost included in the catch basin bid price. No deduction to be made in curb quantities.
PAYMENT: All materials and labor, including excavation and backfilling, shall be paid for under Item 604 - Catch Basin, No. 3 Modified.
REINFORCING STEEL: All reinforcing steel shall have 2" clear cover unless otherwise noted.
STEPS: SHALL BE PROVIDED WHERE THE DEPTH EXCEEDS 48" AND SHALL MEET THE REQUIREMENTS OF DRAWING MH-1.

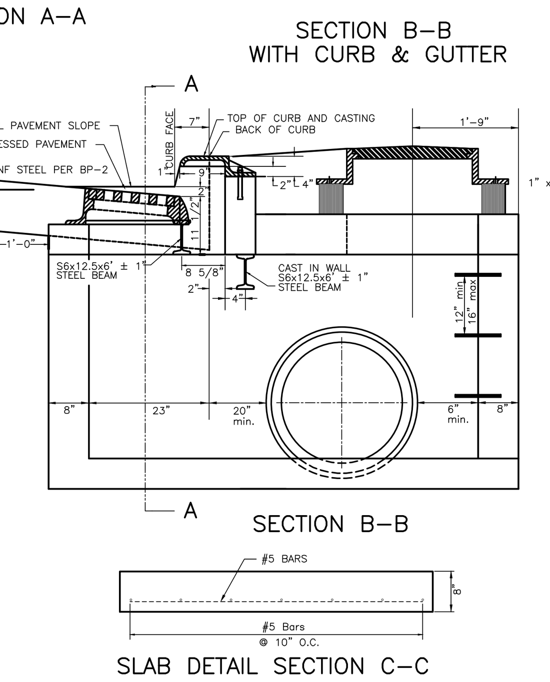

SECTION B-B WITH CURB & GUTTER
SECTION B-B
SLAB DETAIL SECTION C-C

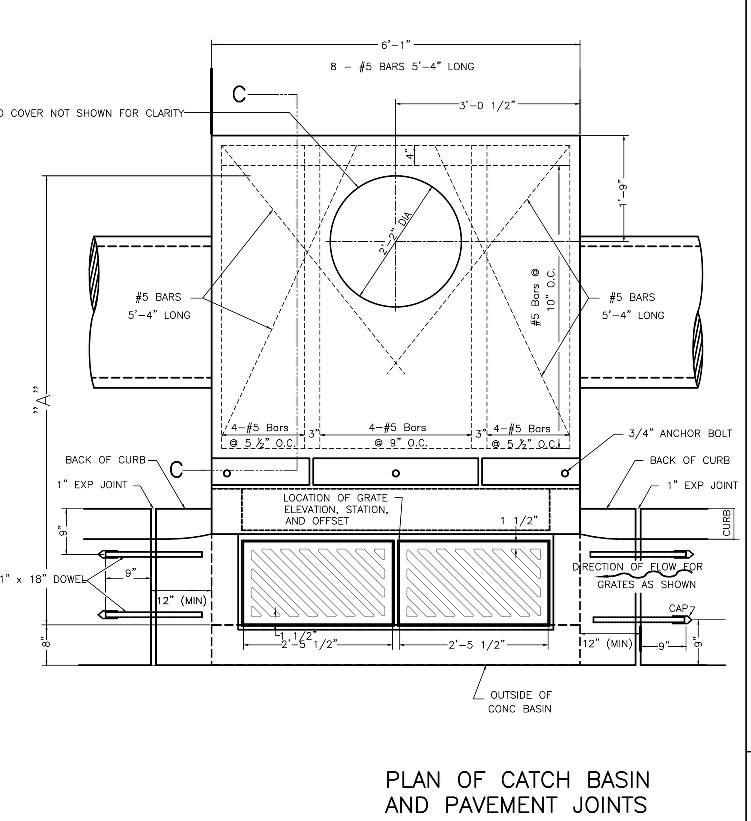

PLAN OF CATCH BASIN AND PAVEMENT JOINTS
* DOWEL LOCATION FOR CURB AND GUTTER

PIPE SIZE	dim. "A"
12" - 21"	80"
24" - 27"	89"
30" - 36"	99"

REVISIONS	DATE	C-7
SLAB REBAR	12/29/11	CATCH BASIN NO. 3 MODIFIED
SEC. C	01/06/12	
SEC. BB	01/06/12	
		CHK. BY: C.A.H. EFFECTIVE DATE: 1-1-94
		BUTLER COUNTY ENGINEERS OFFICE AND OPERATIONS FACILITY 1921 FAIRGROVE AVENUE - HAMILTON, OHIO 45011 PHONE 867-5744

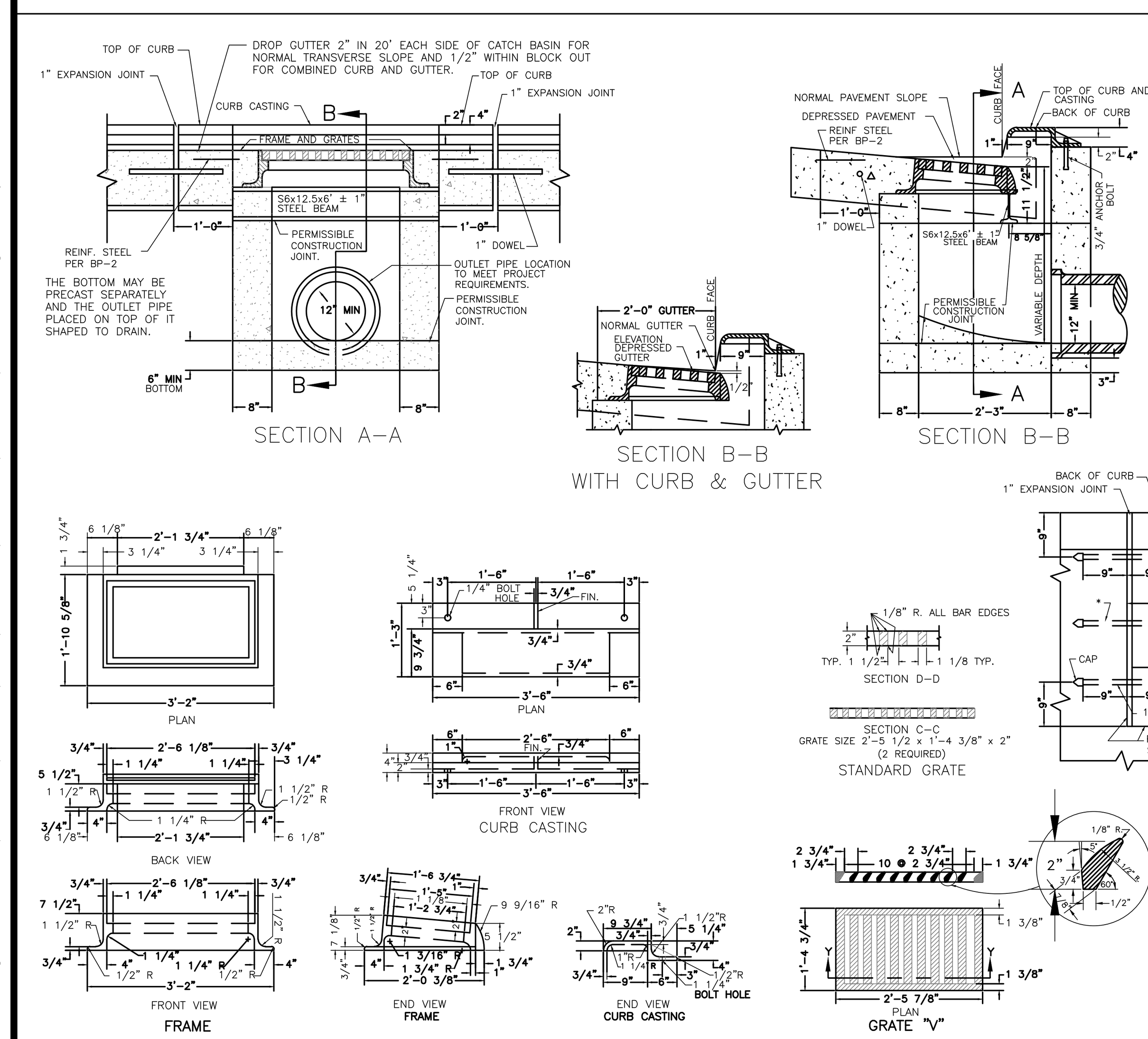

SECTION A-A
SECTION B-B WITH CURB & GUTTER
SECTION B-B
PLAN
BACK VIEW
FRONT VIEW FRAME
PLAN
FRONT VIEW CURB CASTING
END VIEW FRAME
END VIEW CURB CASTING
SECTION D-D
SECTION C-C
GRATE SIZE 2'-5 1/2 x 1'-4 3/8" x 2" (2 REQUIRED)
STANDARD GRATE
PLAN GRATE "V"

NOTES

GRATES:
STANDARD GRATE AS SHOWN IN THE PLAN VIEW SHALL BE PROVIDED UNLESS THE PLANS SPECIFICALLY REQUIRE GRATE "V". PLACE GRATE SO THE DIAGONAL BARS DIRECT DRAINAGE FLOW TOWARD THE CURB. ALL BAR EDGES TO BE ROUNDED 1/8" RADIUS.
CASTINGS:
THE DESIGN SHALL BE ESSENTIALLY THE SAME AND EQUALLY AS STRONG AS THOSE SHOWN HERON. MINIMUM WEIGHTS ARE: CURB CASTING 170 LBS., STANDARD GRATE 127 LBS., FRAME 320 LBS., AND "V" GRATE 105 LBS. BEARING AREAS OF FRAME AND GRATE SHALL BE SO FITTED AND FINISHED AS TO PROVIDE A FIRM AND EVEN SEAT FOR ALL PORTIONS OF THE GRATE IN THE FRAME NO PROJECTIONS SHALL EXIST ON BEARING AREAS OF EITHER CASTING AND THE GRATE WITHOUT ROCKING.
DOWELS: FOUR 1" x 18" ARE REQUIRED FOR CONCRETE PAVEMENT OF GUTTER BLOCKOUT. SEE ODOT BP-4 FOR DOWEL DETAILS.
BRICK OR CONCRETE BLOCK SIDE WALLS WHEN USED IN PLACE OF CONCRETE, SHALL BE 8" NOMINAL THICKNESS.
BLOCKOUT SHALL BE PAVED WITH CLASS C CONCRETE IN PCC PAVEMENT OR GUTTER AND PAID FOR AS PART OF THE PAVEMENT OR GUTTER WITH NO DEDUCTION IN PAVEMENT, CURB OR GUTTER QUANTITIES BECAUSE OF CASTINGS. A CLASS C CONCRETE APRON THE SIZE OF THE 2' GUTTER BLOCKOUT SHALL BE CAST IN PLACE IN ASPHALT PAVEMENT (NO DOWELS REQUIRED) WITH THE COST INCLUDED IN THE CATCH BASIN BID PRICE. NO DEDUCTIN TO BE MADE IN CURB QUANTITIES.
PRECAST CONSTRUCTION IS PERMITTED, EXCEPT FOR APRON, AND CONCRETE SHALL MEET REQUIREMENTS OF 706.13 WITH 6± 2% AIR VOID CONTENT IN THE HARDENED CONCRETE. PRECAST WALLS SHALL HAVE A MINIMUM THICKNESS OF 6" AND REINFORCING SHALL BE SUFFICIENT TO PERMIT SHIPPING AND PLACEMENT WITHOUT DAMAGE.
STEPS STEPS ARE TO BE INSTALLED IN STORM STRUCTURES OVER 4' IN DEPTH AND SHALL MEET THE REQUIREMENTS OF DRAWING MH-1.

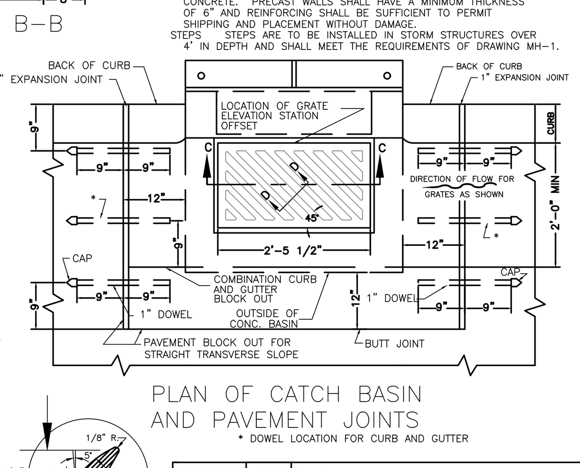

PLAN OF CATCH BASIN AND PAVEMENT JOINTS
* DOWEL LOCATION FOR CURB AND GUTTER

REVISIONS	DATE	C-8
		CATCH BASIN NO. 3A
		CHK. BY: C.A.H. EFFECTIVE DATE: 1-1-94
		BUTLER COUNTY ENGINEERS OFFICE AND OPERATIONS FACILITY 1921 FAIRGROVE AVENUE - HAMILTON, OHIO 45011 PHONE 867-5744

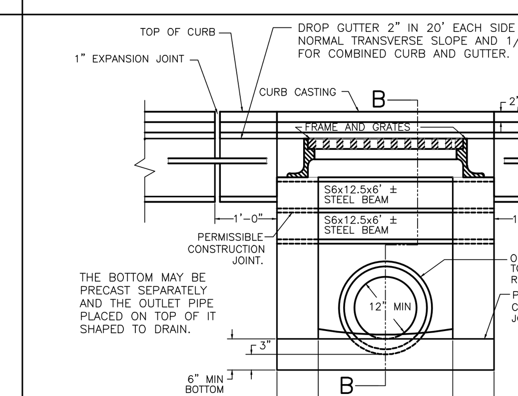

SECTION A-A

PIPE SIZE	dim. "A"
12" - 21"	80"
24" - 27"	89"
30" - 36"	99"

NOTES
GRATES: Two required. For details, seeSCD CB-2.2. Grate "V" shall be provided unless the plans specifically require the diagonal grate. If the diagonal grate is specified, it shall be placed so that the diagonal bars direct drainage flow toward the curb.
CASTINGS: The design shall be essentially the same and equally as strong as shown. Minimum weight [mass]:
Curb Casting . . . . . 305 lbs. [138 kg]
Two Grates . . . . . . 254 lbs. [115 kg]
Frame . . . . 590 lbs. [267 kg], and
Two Grate "V" . . . . 210 lbs. [95 kg]
Lighter weight frames and grates that meet the requirements of CMS 711.14 may also be provided. Grate openings and dimensions shall not differ from those shown, unless otherwise shown in the plans.
The following text shall be cast into the top of the curb casting:
"DUMP NO WASTE" and "DRAINS TO WATERWAY"
Text shall be printed in bold, capital letters with a minimum height of ?". See example on Plan & Section. "WATERWAY" may be substituted with "STREAM","RIVER", "LAKE", etc. Actual placement and logo may vary per manufacturer.
BEARING AREAS: The frame and grate shall be so fitted and finished as to provide a firm and even seat. No projections shall exist on bearing areas and the grate shall seat in its frame without rocking.
WALLS: When used in place of concrete, brick side walls shall be 8" [200] nominal thickness.
PRECAST CONSTRUCTION: Permitted, except for the apron. Concrete shall meet requirements of CMS 706.13. Precast walls shall have a minimum thickness of 6" [150] and reinforcing shall be sufficient to permit shipping and placement without damage. The wall thickness reduction shall be from the outside.
MINIMUM DEPTH: The minimum depth is per the cover requirements for that pipe type.
OPENINGS: Any pipe openings greater than 4" [100] from the outside of the pipe to the structure require the Engineer's approval. Fill all voids per CMS 604.
DOWELS: Four 1"x18" [25x450] dowels are required for concrete pavement or gutter blockout. See SCD BP-2.2 for dowel details.
BLOCKOUT: Blockouts shall be paved with Class C concrete in PCC pavement or gutter, and paid for as part of the pavement or gutter with no deduction in pavement, curb or gutter quantities because of the castings. A Class C concrete apron, the size of the 2'-0" [600] gutter blockout, shall be cast-in-place in asphalt pavement (no dowels required) with the cost included in the catch basin bid price. No deduction to be made in curb quantities.
PAYMENT: All materials and labor, including excavation and backfilling, shall be paid for under Item 604 - Catch Basin, No. 3A Modified.
REINFORCING STEEL: All reinforcing steel shall have 2" clear cover unless otherwise noted.
STEPS: SHALL BE PROVIDED WHERE THE DEPTH EXCEEDS 48" AND SHALL MEET THE REQUIREMENTS OF DRAWING MH-1.

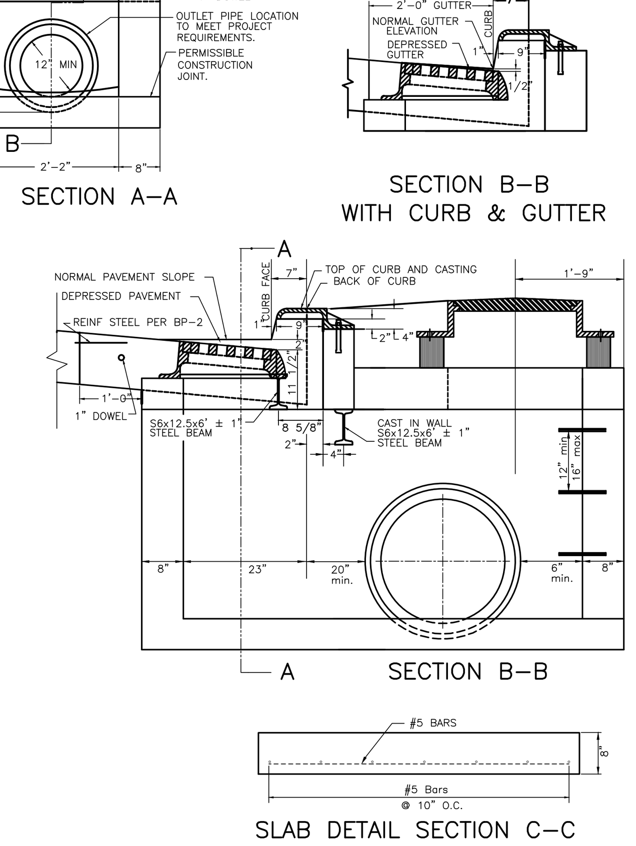

SECTION B-B WITH CURB & GUTTER
SECTION B-B
SLAB DETAIL SECTION C-C

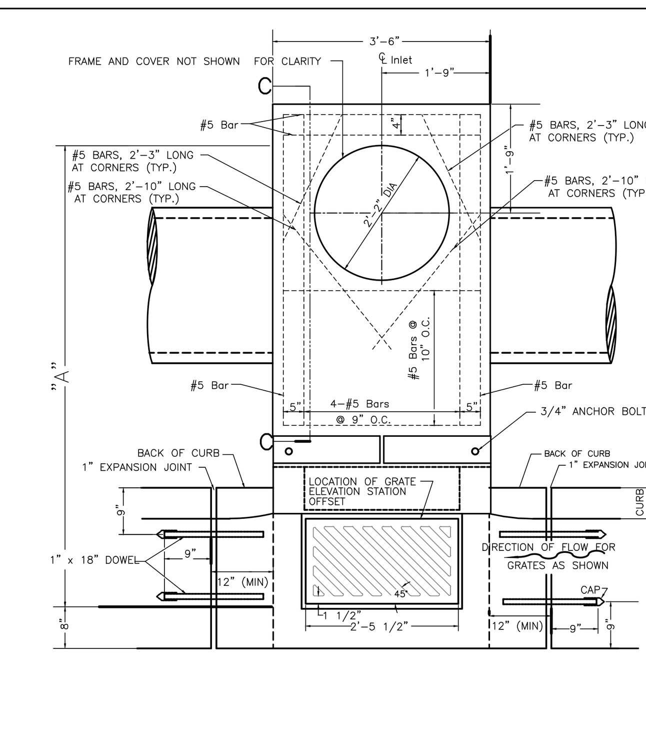

PLAN OF CATCH BASIN AND PAVEMENT JOINTS
* DOWEL LOCATION FOR CURB AND GUTTER

REVISIONS	DATE	C-9
SLAB REBAR	12/29/11	CATCH BASIN NO. 3A-MOD.
SEC. C	01/06/12	
SEC. BB	01/06/12	
		CHK. BY: G.J.W. EFFECTIVE DATE: 1-1-94
		BUTLER COUNTY ENGINEERS OFFICE AND OPERATIONS FACILITY 1921 FAIRGROVE AVENUE - HAMILTON, OHIO 45011 PHONE 867-5744

STANDARD

D DIAM OF PIPE	L LENGTH HEAD WALL	A BARS NO.	A BARS LENGTH	B BARS NO.	B BARS LENGTH	LBS.	REINF. C.Y.	PLAIN C.Y.
		QUANTITIES IN TWO HEADWALLS						
12"	4'-0"	8	4'-0"	8	3'-6"	40	1.3	2.1
15"	5'-0"	8	4'-3"	8	4'-6"	47	1.7	2.7
18"	5'-9"	8	4'-6"	8	5'-3"	52	2.0	3.3
21"	6'-9"	8	4'-9"	8	6'-3"	59	2.4	4.0
24"	7'-6"	8	5'-0"	8	7'-0"	64	2.8	4.6
27"	8'-6"	8	5'-3"	8	8'-0"	71	3.3	5.5
30"	9'-3"	8	5'-6"	8	8'-9"	76	3.8	6.2
33"	10'-3"	8	5'-9"	8	9'-9"	83	4.3	7.2
36"	11'-0"	8	6'-0"	8	10'-6"	88	4.8	8.0

HEADWALLS FOR PIPES HAVING A DIAMETER GREATER THAN 36 INCHES SHALL BE DESIGNED AS A CANTILEVER OR GRAVITY TYPE WALL.

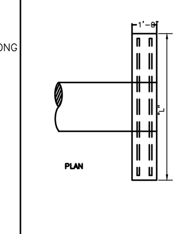

PLAN

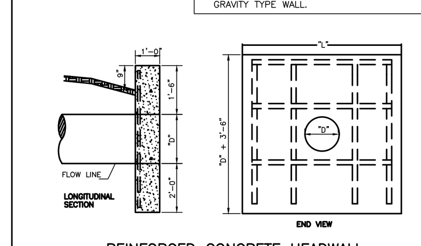

REINFORCED CONCRETE HEADWALL

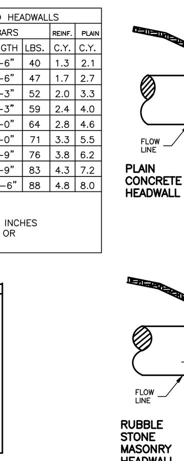

PLAIN CONCRETE HEADWALL
RUBBLE STONE MASONRY HEADWALL
ALTERNATE DESIGN

HILLSIDE

D DIAM OF PIPE	Inlet A BARS NO.	Inlet A BARS LENGTH	Inlet B BARS NO.	Inlet B BARS LENGTH	Inlet D BARS NO.	Inlet D BARS LENGTH	Inlet STEEL LBS.	Inlet CONC. C.Y.	Outlet A BARS NO.	Outlet A BARS LENGTH	Outlet B BARS NO.	Outlet B BARS LENGTH	Outlet C BARS NO.	Outlet C BARS LENGTH	Outlet STEEL LBS.	Outlet CONC. C.Y.
	QUANTITIES IN ONE INLET WALL								QUANTITES IN ONE OUTLET WALL							
12"	4	3'-6"	2	4'-0"	1	12'-6"	23	1.8	2	3'-6"	3	4'-0"	1	6'-0"	17	0.9
15"	4	3'-9"	2	4'-3"	1	12'-6"	24	1.9	2	3'-9"	3	4'-3"	1	6'-0"	18	1.0
18"	4	4'-0"	2	4'-6"	1	12'-6"	25	2.0	2	4'-0"	3	4'-6"	1	6'-0"	18	1.0
21"	4	4'-3"	2	4'-9"	1	12'-6"	26	2.1	2	4'-3"	3	4'-9"	1	6'-0"	19	1.1
24"	4	4'-6"	2	5'-0"	1	12'-6"	27	2.2	2	4'-6"	3	5'-0"	1	6'-0"	20	1.1

NOTES
REINFORCING STEEL PROVIDED FOR ON THIS DRAWING SHALL BE 1/2" ROUND BARS OR BARS OF EQUIVLENT AREA.
CONCRETE FOR HEADWALLS SHALL BE CLASS "C".

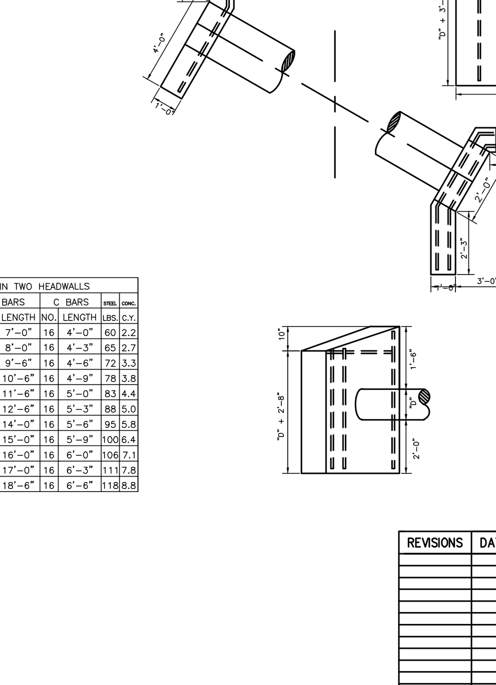

SIDE ROAD

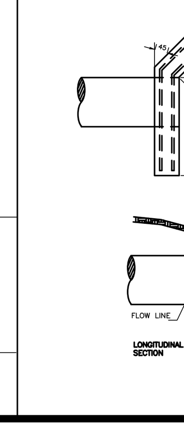

D DIAM OF PIPE	L-1	L-2	H	A BARS NO.	A BARS LENGTH	B BARS NO.	B BARS LENGTH	C BARS NO.	C BARS LENGTH	STEEL LBS.	CONC. C.Y.
				QUANTITIES IN TWO HEADWALLS							
12"	2'-6"	1'-6"	4'-6"	2	6'-0"	2	7'-0"	16	4'-0"	60	2.2
15"	3'-0"	2'-0"	4'-9"	2	7'-0"	2	8'-0"	16	4'-3"	65	2.7
18"	3'-9"	2'-9"	5'-0"	2	8'-6"	2	9'-6"	16	4'-6"	72	3.3
21"	4'-3"	3'-3"	5'-3"	2	9'-6"	2	10'-6"	16	4'-9"	78	3.8
24"	4'-9"	3'-9"	5'-6"	2	10'-6"	2	11'-6"	16	5'-0"	83	4.4
27"	5'-3"	4'-3"	5'-9"	2	11'-6"	2	12'-6"	16	5'-3"	88	5.0
30"	6'-0"	5'-0"	6'-0"	2	13'-0"	2	14'-0"	16	5'-6"	95	5.8
33"	6'-6"	5'-6"	6'-3"	2	14'-0"	2	15'-0"	16	5'-9"	100	6.4
36"	7'-0"	6'-0"	6'-6"	2	15'-0"	2	16'-0"	16	6'-0"	106	7.1
39"	7'-6"	6'-6"	6'-9"	2	16'-0"	2	17'-0"	16	6'-3"	111	7.8
42"	8'-3"	7'-3"	7'-0"	2	17'-6"	2	18'-6"	16	6'-6"	118	8.8

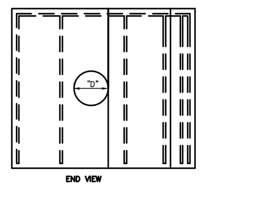

END VIEW

REVISIONS	DATE	
		HEADWALLS HW-D
		CHK. BY: C.A.H. EFFECTIVE DATE: 1-1-94
		BUTLER COUNTY ENGINEERS OFFICE AND OPERATIONS FACILITY 1921 FAIRGROVE AVENUE - HAMILTON, OHIO 45011 PHONE 867-5744

Item	Revision Description	Date	Drwn:	Chk:

BUTLER COUNTY, OHIO
STORM DETAILS

bayer becker
www.bayerbecker.com
6900 Tylersville Road, Suite A
Mason, OH 45040 - 513.336.6600

Drawing: BC STM
Drawn by:
Checked By:
Issue Date: 8-13-12
Sheet: 12/13

THIS DOCUMENT AND ALL RELATED DETAIL DRAWINGS, SPECIFICATIONS, AND ELECTRONIC MEDIA PREPARED OR FURNISHED BY BAYER BECKER (BB), ARE INSTRUMENTS OF BB'S PROFESSIONAL SERVICE, AND IS THE EXCLUSIVE PROPERTY OF BB. NO DISCLOSURE, USE, REPRODUCTION, OR DUPLICATION IN WHOLE, OR IN PART, MAY BE MADE WITHOUT WRITTEN PERMISSION OF BB, AND IS DONE SO AT USER'S SOLE RISK. COPYRIGHT - ALL RIGHTS RESERVED.

Plot time: Dec 21, 2022 - 9:03am
Drawing name: K:\OLD-K\Mason\~FF\BLOCKS\DETAILS\BUTLER\BC STM.dwg - Layout Tab: STM

Plot time: Jul 13, 2023 – 2:44pm
Drawing name: K:\OLD-K\Mason\~FF\BLOCKS\DETAILS\SOILEROS\SOIL.DWG – Layout Tab: SOIL

GENERAL NOTES: EROSION PREVENTION AND SEDIMENT CONTROL ON SITE

Introduction: By using some simple Best Management Practices (BMP's) developers and contractors can do their share to protect the project area's water resources from the harmful effects of sediment. The topography of the site and the extent of the construction activities will determine which of these practices are applicable to any given site, but the BMP's listed here are applicable to most construction sites. For details on the installation and maintenance of these BMP's, please refer to the approved plans and or the Rainwater **and Land Development, Ohio's Standards for Storm Water Management, Land** *Development and Urban Stream Protection (ODNR).*

Timing: Sediment control structures shall be functional throughout earth disturbing activity. They shall continue to function until the development area is restablized.

Temporary Stabilization is the most effective BMP. All disturbed areas that will lie dormant for 14 days or more must be stabilized within 7 days of the date the area becomes inactive. The goal of temporary stabilization is to provide cover quickly. Areas within 50 feet of a stream must be stabilized within 2 days of reaching final grade. This is accomplished by seeding with fast-growing grasses, then covering with straw mulch. See the Rainwater and Land Development Manual for seasonally adjusted seeding specifications. To minimize your costs of temporary stabilization, leave natural cover in place for as long as possible by only disturbing areas worked within the next 14 days.

Construction Entrances are installed to minimize off-site tracking of sediments. A rough stone access drive underlain with woven geotextile shall be installed at every point where vehicles enter or exit the site. Every individual lot should also have its own drive once construction on the lot begins. Maintenance is performed by top dressing with stone and/or street sweeping.

Silt Fence or Mulch Berms are typically used at the perimeter of a disturbed area. They are only for small drainage areas on relatively flat slopes or around small soil storage piles; not suitable where runoff is concentrated in a ditch, pipes or though streams. For large drainage areas where flow is concentrated, collect runoff in diversion berms or channels and pass it through a sediment pond prior to discharging it from the site. Combination barriers constructed of silt fence supported by welded wire fencing, mulch berms supported by rock check dams, or silt fence embedded within rock check dams may be effective within small channels. As with all sediment controls, silt fence or mulch berms must be capable of ponding runoff so that sediment can settle out of suspension. These must be installed within 7 days of first grubbing the area it controls. Whenever practical they should be installed before clearing or grubbing the area it controls.

Inlet Protection must be installed on all yard drains and curb drains when these inlets do not drain to a sediment trap or basin. Even if there is a sediment trap or basin, inlet protection is still recommended, as it will reduce the amount of sediment entering the basin and increase the overall sediment removal efficiency. Best used on roads with little or no traffic. If working properly, inlet protection will cause water to pond. If used on curb inlets, streets will flood temporarily during heavy storms, (overflow should be built-in.) Check with the authority that has jurisdiction over the roads before installing. They may prefer an alternate BMP. Care should be taken when placing inlet protection so that the runoff is not diverted to public roads or other areas where it could cause a hazard.

Waste Disposal: No solid or liquid waste, including building materials, shall be discharged in storm water runoff. Off-site vehicle tracking of sediments shall be minimized. the plan shall ensure and demonstrate compliance and applicable State of local waste disposal, sanitary sewer or septic system regulations.

Permanent Stabilization must occur on areas at final grade within 7 days of reaching final grade. This is usually accomplished by using seed and mulch, but special measures are sometimes required. This is particularly true in drainage ditches or on steep slopes. These measures include the addition of topsoil, erosion control matting, rock riprap or retaining walls. See the Rainwater and Land Development Manual for seasonally adjusted seeding specifications. At all times of the year, the area should be temporarily stabilized until a permanent seeding can be applied. Areas within 50 feet of a stream must be stabilized within 2 days of reaching final grade.

Maintenance: All temporary and permanent control practices shall be maintained and repaired as needed to assure continued performance of their intended function.

Inspections shall be performed at least once a week and within 24 hours after a storm event greater than 1/2 inch of rainfall within a 24-hour duration using the enclosed Inspection Form. Inspections can be tracked using the enclosed Inspection Log. These shall be maintained throughout the development process and kept on file for three years per OEPA requirements. Inspection shall be done only by a qualified inspection personnel as determined by the Construction Stormwater General permit. Inspection frequency may be reduced to monthly for dormant sites if the entire site is temporarily stabilized or runoff is unlikely due to weather conditions for extended periods of time. Erosion prevention and sediment control (EP&SC) measures shall be observed to ensure correct operation. Discharge locations shall be inspected to determine effectiveness of EP&SC measures in preventing significant impacts to the receiving waters. Where practices require repair or maintenance, it must be accomplished within three days of the inspection or as soon as site conditions allow. Repairs to sediment ponds shall be completed within 10 days or as soon as site conditions allow. Most of these BMP's are easy to implement with a little bit of planning and go a long way toward keeping your site clean and organized if they are properly installed and maintained. Please be sure to inform all parties on site how these BMPs affect their operations on the site, particularly those that will be working near a stream.

1 TEMPORARY SEEDING & MULCHING

Temporary seeding provides erosion control on areas in between construction operations. Grasses which are quick growing are seeded and usually mulched to provide prompt, temporary soil stabilization. It effectively minimizes the area of a construction-site prone to erosion and should be used everywhere the sequence of construction operations allows vegetation to be established.

CONDITIONS WHERE PRACTICE APPLIES

Temporary seeding should be applied on exposed soil where additional work (grading,etc.) is not scheduled for more than 14 days. Permanent seeding should be applied if the areas will be idle for more than a year.

PLANNING CONSIDERATIONS

This practice has the potential to drastically reduce the amount of sediment eroded from a construction-site. Control efficiencies greater than 90% will be achieved with proper applications of temporary seeding. Because practices used to trap sediment are usually much less effective, temporary seeding is to be used even on areas where runoff is treated by sediment trapping practices. Because temporary seeding is highly effective and practical on construction-sites, its liberal use is highly recommended.

Temporary Seeding Species Selection

Seeding Dates	Species	Lb./1,000 ft. ^{2}	Per Acre
March 1 to August 15	Oats Tall Fescue Annual Ryegrass	3 1 1	4 bushel 40 lb. 40 lb.
	Perennial Ryegrass Tall Fescue Annual Ryegrass	1 1 1	40 lb. 40 lb. 40 lb.
August 16 to November 1	Rye Tall Fescue Annual Ryegrass	3 1 1	2 bushel 40 lb. 40 lb.
	Wheat Tall Fescue Annual Ryegrass	3 1 1	2 bushel 40 lb. 40 lb.
	Perennial Ryegrass Tall Fescue Annual Ryegrass	1 1 1	40 lb. 40 lb. 40 lb.
November 1 to Spring Seeding	Use mulch only, sodding practices or dormant seeding.		
Note: Other approved seed species may be substituted.			

1. Structural erosion- and sediment-control practices such as diversions and sediment traps shall be installed and stabilized with temporary seeding prior to grading the rest of the construction-site.
2. Temporary seed shall be applied between construction operations on soil that will not be graded or reworked for 14 days or more. These idle areas should be seeded as soon as possible after grading or shall be seeded within 7 days. Several applications of temporary seeing are necessary on typical construction projects.
3. The seedbed should be pulverized and loose to ensure the success of establishing vegetation. However, temporary seeding shall not be postponed if ideal seedbed preparation is not possible.
4. Soil Amendments--Applications of temporary vegetation shall establish adequate stands of vegetation which may require the use of soil amendments. Soil tests should be taken on the site to predict the need for lime and fertilizer.
5. Seeding Method--Seed shall be applied uniformly with a cyclone seeder, drill cultipacker seeder, or hydroseeder. When feasible, seed that has been broadcast shall be covered by raking or dragging and then lightly tamped into place using a roller or cultipacker. If hydroseeding is used, the seed and fertilizer will be mixed on-site and the seeding shall be done immediately and without interruption.

MULCHING TEMPORARY SEEDING

1. Applications of temporary seeding shall include mulch which shall be applied during or immediately after seeding. Seedings made during optimum seeding dates and with favorable soil conditions and on very flat areas may not need mulch to achieve adequate stabilization.

2. Materials:

* Straw--If straw is used, it shall be unrotted small-grain straw applied at the rate of 2 tons/ac. or 90 lb./1,000 sq. ft. (two to three bales). The mulch shall be spread uniformly by hand or mechanically so the soil surface is covered. For uniform distribution of hand-spread mulch, divide area into approximately 1,000-sq.-ft. sections and spread two 45-lb. bales of straw in each section.
* Hydroseeders--If wood cellulose fiber is used, it shall be used at 2,000 lb/ac. or 46 lb./1,000 sq. ft.
* Other--Other acceptance mulches include mulch mattings applied according to manufacturer's recommendations or wood chips applied at 6 tons/ac.

3. Straw mulch shall be anchored immediately to minimize loss by wind or water. Anchoring Methods:

* Mechanical--A disk, crimper, or similar type tool shall be set straight to punch or anchor the mulch material into the soil. Straw mechanically anchored shall not be finely chopped but, generally, be left longer than 6 in.
* Mulch Nettings--Nettings shall be used according to the manufacturer's recommendations. Netting may be necessary to hold mulch in place in areas of concentration runoff and on critical slopes.
* Asphalt Emulsion--Asphalt shall be applied as recommended by the manufacturer or at the rate of 160 gal./ac.
* Synthetic Binders--Synthetic binders such as Acrylic DLR (Agri-Tac), DCA-70, Petroset, Terra Tack or equal may be used at rates recommended by the manufacturer.
* Wood-Cellulose Fiber--Wood-cellulose fiber binder shall be applied at a net dry weight of 750 lb./ac. The wood-cellulose fiber shall be mixed with water and the mixture shall contain a maximum of 50 lb./100 gal.

DORMANT SEEDINGS

1. Seeding shall not be planted from October 1 through November 20. During this period the seeds are likely to germinate but probably will not be able to survive the winter.
2. The following methods may be used for "Dormant Seeding":

* From October 1 through November 20, prepare the seedbed, add the required amounts of lime and fertilizer, then mulch and anchor. After November 20, and before March 15, broadcast the selected seed mixture. Increase the seeding rates by 50% for this type of seeding.
* From November 20 through March 15, when soil conditions permit, prepare the seedbed, lime and fertilize, apply the selected seed mixture, mulch and anchor. Increase the seeding rates by 50% for this type of seeding.
* Apply seed uniformly with a cyclone seeder, drill, cultipacker seeder, or hydro-seeder (slurry may include seed and fertilizer) on a firm, moist seedbed.
* Where feasible, except when a cultipacker type seeder is used, the seedbed should be firmed following seeding operations with a cultipacker, roller, or light drag. On sloping land, seeding operations should be on the contour where feasible.
* Mulch Nettings--Nettings shall be used according to the manufacturer's recommendations. Netting may be necessary to hold mulch in place in areas of concentrated runoff and on critical slopes.
* Asphalt Emulsion--Asphalt shall be applied as recommended by the manufacturer or at the rate of 160 gal./ac.
* Synthetic Binders--Synthetic binders such as Acrylic DLR (Agri-Tac), DAC-70, Petroset, Terra Tack or equal may be used at rates recommended by the manufacturer.
* Wood Cellulose Fiber--Wood cellulose fiber binder shall be applied at a net dry weight of 750 lb./ac. The wood cellulose fiber shall be mixed with water and the mixture shall contain a maximum of 50 lb./100 gal. of wood cellulose fiber.

IRRIGATION

1. Permanent seeding shall include irrigation to establish vegetation during dry or hot weather or on adverse site conditions as needed for adequate moisture for seed germination and plant growth.
2. Excessive irrigation rates shall be avoided and irrigation monitored to prevent erosion and damage from runoff.

2 SODDING
Spread 4 to 6 inches of topsoil. Fertilize according to soil test (or apply 10lb./1000 sq. ft. of 20–10–10 or 10–10–10 fertilizer.) Lightly water the soil. Lay sod. Tamp or roll lightly. On slopes, lay sod starting at the bottom and work toward the top. Peg each piece down in several places. Initial watering should wet soil 6 inches deep (or until water stands 1 inch deep in a straight–sided container.) Then water lightly every day or two for 2 weeks. If construction is completed after October 31, seeding or sodding may be delayed. Applying mulch or temporary seed (such as rye or winter wheat) is recommended if weather permits. Straw bale or silt fences must be maintained until final seeding or sodding is completed in spring March 15– May 31.

3 PRESERVING EXISTING VEGETATION
Wherever possible, preserve existing trees, shrubs, and other vegetation. To prevent root damage, do not grade, place soil piles, or park vehicles near trees marked for preservation. Place plastic mesh or snow fence barriers around trees to protect the area below their branches.

5 SILT FENCE or MULCH BERM
Put up before any other work is done. Install on downslope side(s) of site with ends extended up sideslopes a short distance. Place parallel to the contour of the land to allow water to pond behind fence. Entrench 4 inches deep (see back page.) Stake (2 stakes per bale OR 1 stake every 3 feet for silt fence.) Leave no gaps between bales or sections of silt fence. Inspect and repair once a week and after every 1/2 inch rain. Remove sediment if deposits reach half the fence or straw bale height. Maintain until a lawn is established.

5 SILT FENCE OR MULCH BERM DETAILS

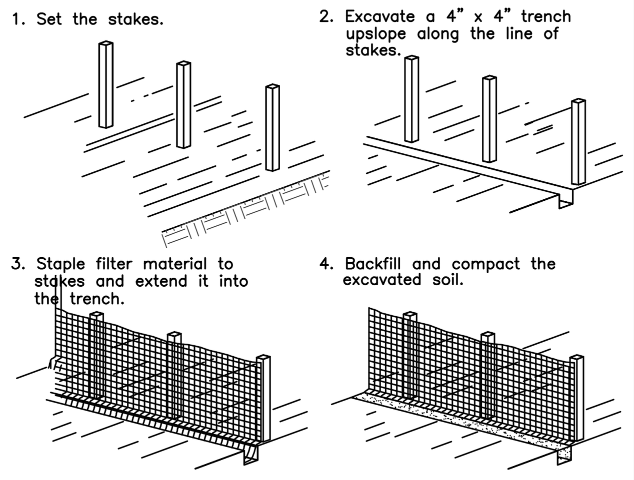

CONSTRUCTION OF A FILTER BARRIER

Source: Installation of Straw and Fabric Filter Barriers for Sediment Control, Sherwood and Wyant

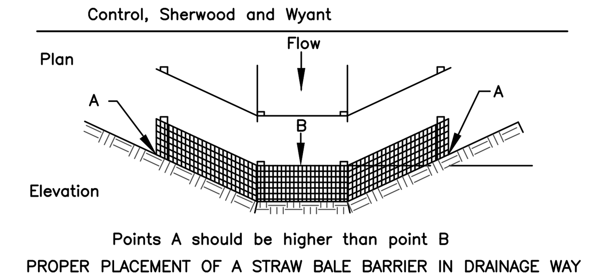

Points A should be higher than point B
PROPER PLACEMENT OF A STRAW BALE BARRIER IN DRAINAGE WAY

Source: Adapted from Installation of Straw and Fabric Filter Barriers for Sediment Control, Sherwood and Wyant

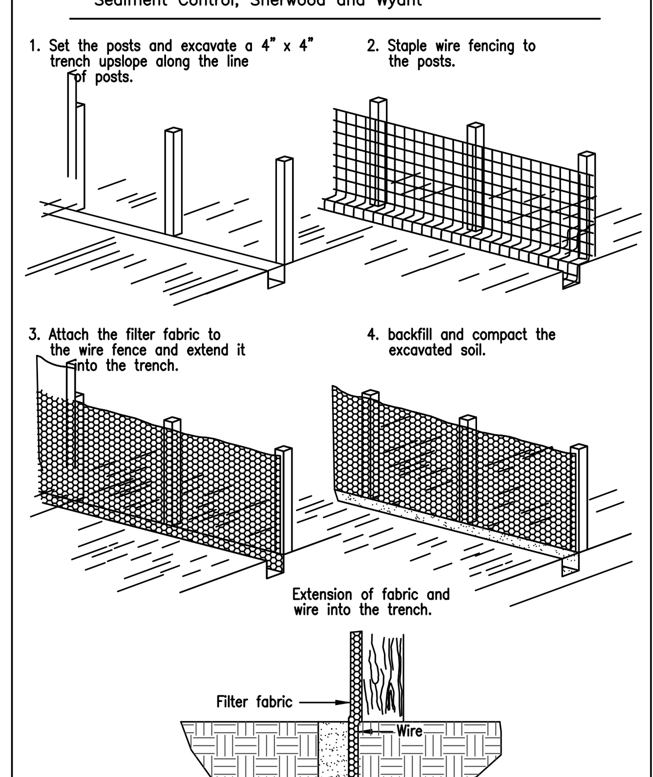

Source: Adapted from Installation of Straw and Fabric Filter Barriers for Sediment Control, Sherwood and Wyant

INSTALLATION NOTES AND SPECIFICATIONS FOR MULCH BERM:
1. Mulch berm should be placed along a level contour so that it will not channel runoff and create concentrated flows.
2. Upland drainage limitations (sheet flow)
3. Design Criteria:
   –particle sizes (99% passing 1 inch sieve etc.)
   –moisture content
   –no less than 70% organdies
4. Planning considerations: most effective when combined with vegetated buffer.

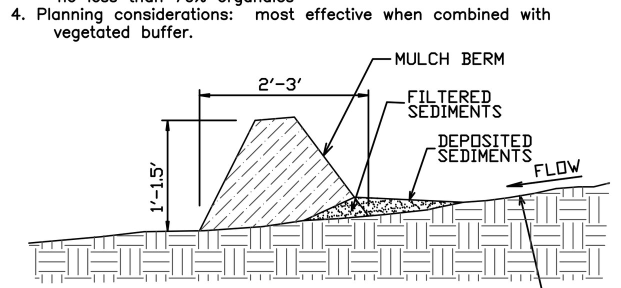

6 SOIL PILES
Located away from any downslope street, driveway, stream, lake, wetland, ditch or drainageway. Temporary seed such as annual rye is recommended for topsoil piles. Surround with straw bales or silt fence.
GRAVEL DRIVE
Install a single access drive using 3 to 5 inch aggregate over a geotextile material. Lay gravel 6 inches deep and 10 feet wide from the foundation to the street. Use to prevent tracking dirt onto the road by all vehicles. Maintain throughout construction until driveway is paved. Park all construction vehicles on the street and off of the site.
SEDIMENT CLEANUP
By the end of each work day, sweep or scrape up soil tracked onto the road. By the end of the next work day after a storm, clean up soil washed off–site, and check straw bales and silt fence for damage or sediment buildup. DOWNSPOUT EXTENDERS
Not required, but highly recommended. Install as soon as gutters and downspouts are completed. Route water to a grassed or paved area. Maintain until a lawn is established.

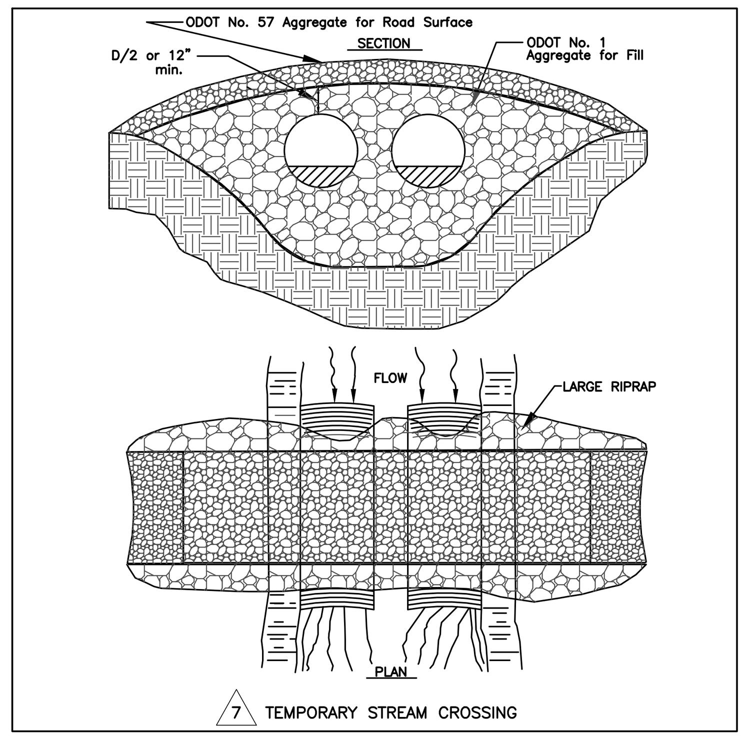

7 TEMPORARY STREAM CROSSING

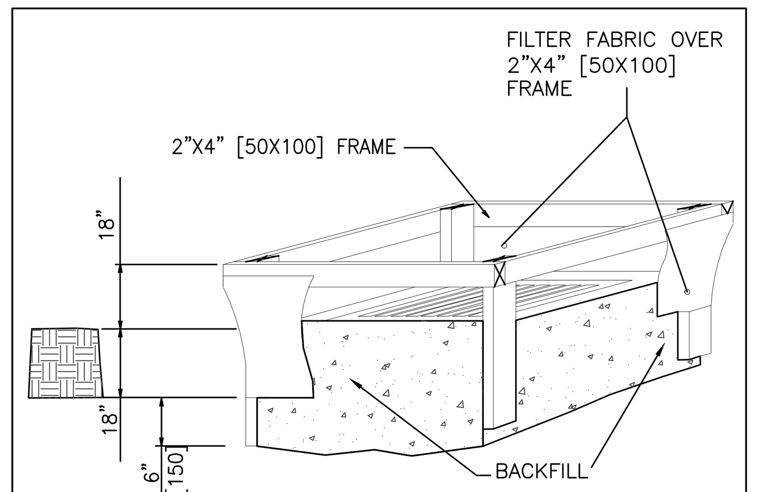

1. Inlet protection shall be constructed either before upslope land disturbance begins of before the storm drain becomes operational.
2. The Earth around the inlet shal be excavated completely to a depth at least 18 in.
3. The wooden frame shall be constructed of 2–by–4–in. constuction–grade lumber. the 2–by–4in. Posts shall be driven 1 ft. into the ground at four corners of the inlet and the top portion of the 2–by–4–in. frame assembled using the overlap joint shown. The top of the frame shall be at least 6–in. below adjacent roadsif ponded water pose a safety hazard to traffic.
4. Wire mesh shall be of sufficient strength to support fabric with water fully impounded against it. It shall be stretched tightly around the frame and fastened securely to the frame.
5. Geotextile shall have an equivalent opening size of 20–40 sieve and be resistant to sunlight. It shall be stretched tightly around the frame and fastened securely. It shall extend from the top of the frame to 18 in. below the inlet notch elevation. The geotextile shall overlap across one side of the inlet so the ends of the cloth are not fastened to the same post.
6. Backfill shall be placed around the inlet in compacted 6–in. layers until the earth is even with notch elevation on ends and top elevation on sides.
7. A compacte earth dike or a check dam shall be constructed in the ditch line below the inlet if the inlet is not in a depression and if runoff bypassing the inlet will not flow to a settling pond. The top of earth dikes shall be at least 6 in. higher than the top of the frame.

9 GEOTEXTILE INLET PROTECTION IN SWALES, DITCH LINES OR YARD INLETS

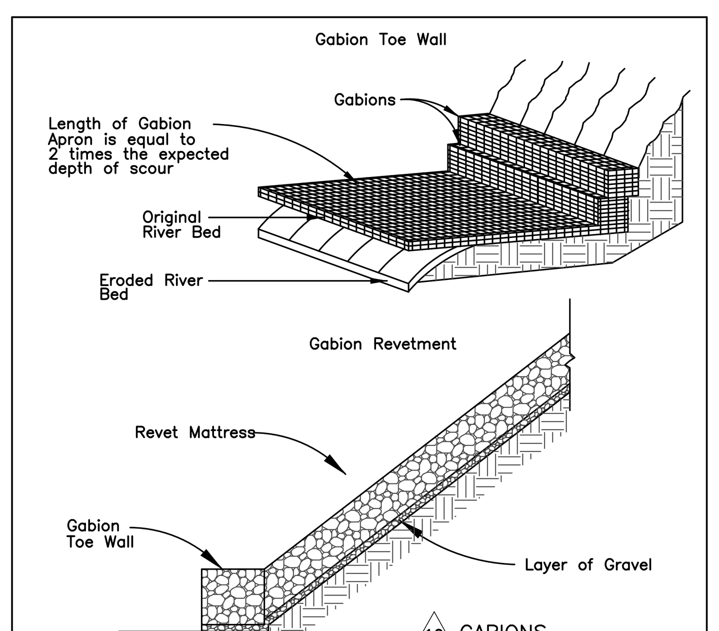

10 GABIONS
Source: Adapted from product literature of Bekaert Gabions.

SEDIMENT TRAPS & DAMS

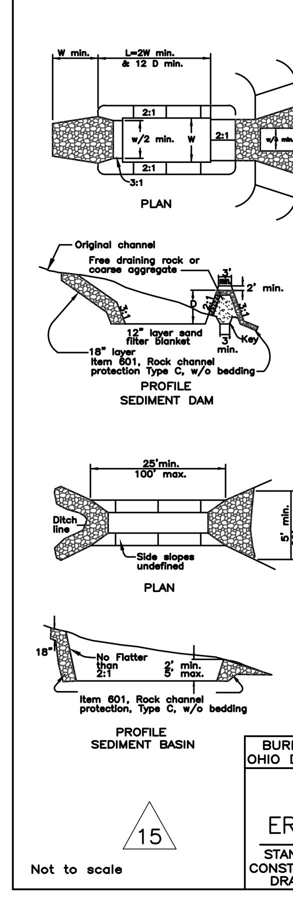

EMBANKMENT for sediment basin construction shall be as 203 compacted as directed by the Engineer.

MAINTENANCE: Sediment pits, dams and basins shall be acceptably maintained. Deposited sediment shall be removed when the initial volume has been reduced one–half. The sand filter blanket on sediment basins shall be replaced when deposited sediment is removed. The cost of maintenance shall be covered by Item 207.

FILTERS: Plastic filter fabric, as approved by the engineer, may be substituded for the sand filter blanket on sediment dams. Such fabrics may be cleaned in lieu of replacement, when approved by the Engineer.

SIZE: A series of smaller basins or dams may be substituted for a larger basin or dam when approved by the Engineer.

BASIS OF PAYMENT: Sediment Dams and Basins shall be paid for under Item 207 Cubic Yard Temporary benches, dikes, dams and sediment basins. Rock required shall be paid for under Item 601, Cubic Yard, Rock channel protection, Type C, w/o bedding.

Not to scale
15
BUREAU OF LOCATION AND DESIGN
OHIO DEPARTMENT OF TRANSPORTATION
TEMPORARY EROSION CONTROL
STANDARD CONSTRUCTION DRAWING MC–11

DIKES AND SLOPE PROTECTION

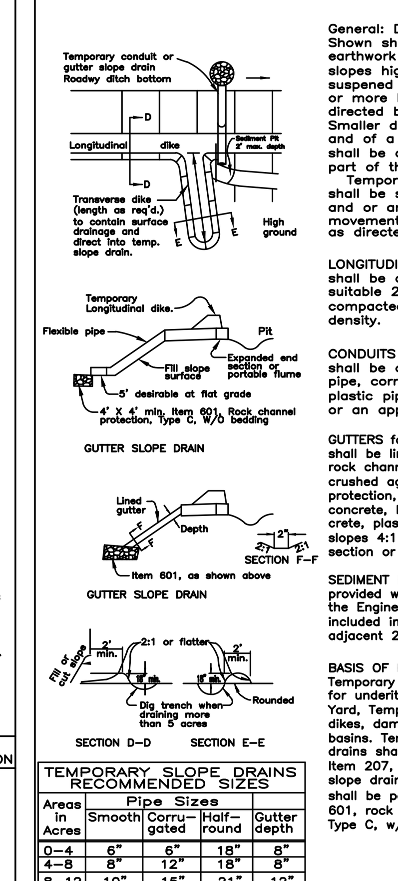

General: Dikes & drains Shown shall be used when earthwork operations on slopes higher than 8' are suspened for three weeks or more less/or as directed by the Engineer Smaller dikes used at the and of a day's operation shall be considered as part of the earthwork.
Temporary slope drains shall be suitably positioned and or anchored to prevent movement or undermining, as directed by the Engineer.

LONGITUDINAL DIKES shall be constructed of suitable 203 material and compacted to 85% maximum density.

CONDUITS for slope drains shall be corrugated steel pipe, corrugated or smooth plastic pipe, rubber conduit, or an approved equal.

GUTTERS for slope drains shall be lined with Type C rock channel protection, crushed aggregate slope protection, portland cement concrete, bituminous concrete, plastic sheeting (on slopes 4:1 max.), partial pipe section or approved equal.

SEDIMENT PITS shall be provided where directed by the Engineer and their cost included in the price bid for adjacent 207 items.

BASIS OF PAYMENT: Temporary dikes shall be paid for underitem 207, Cubic Yard, Temporary benches, dikes, dams and sediment basins. Temporary slope drains shall be paid for under Item 207, Linear foot, Temporary slope drains. Rock required shall be paid for under Item 601, rock channel protection, Type C, w/o bedding.

TEMPORARY SLOPE DRAINS RECOMMENDED SIZES

Areas in Acres	Pipe Sizes: Smooth	Corrugated	Half–round	Gutter depth
0–4	6"	6"	18"	8"
4–8	8"	12"	18"	8"
8–12	10"	15"	21"	12"

Not to scale
16

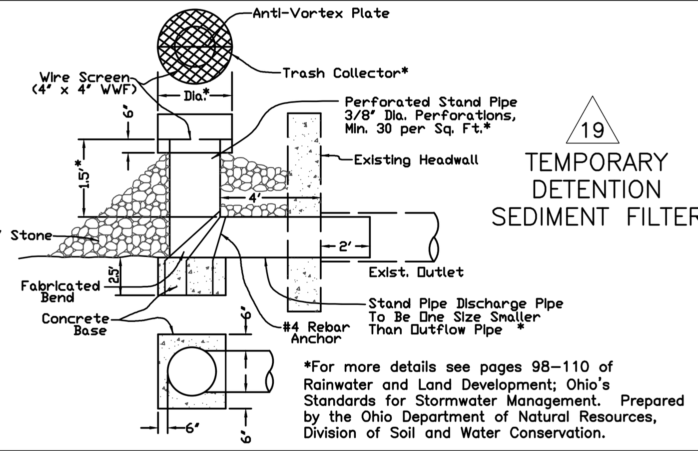

19 TEMPORARY DETENTION SEDIMENT FILTER

*For more details see pages 98–110 of Rainwater and Land Development; Ohio's Standards for Stormwater Management. Prepared by the Ohio Department of Natural Resources, Division of Soil and Water Conservation.

20 DANDY BAG® /BEAVER DAM

Installation and Maintenance Guidelines

Installation: The empty Beaver Dam should be placed over the grate as the grate stands on end. If using optional oil absorbents; place absorbent pillow on pouch, on the bottom (below–grade side) of the unit. Attach absorbent pillow to tether loop. Tuck the enclosure flap inside to completely enclose the grate. Holding the lifting devices (do not rely on lifting devices to support the entire weight of the grate), place the grate into its frame (street side first), then lower back edge with dam into place. The Beaver Dam should be partially blocking the curb hood when installed properly.

Maintenance: Remove all accumulated sediment and debris from surface and vicinity of unit after each storm event. Remove sediment that has accumulated within the containment area of the Beaver Dam as needed. If using optional oil absorbents; remove and replace absorbent pillow when near saturation.

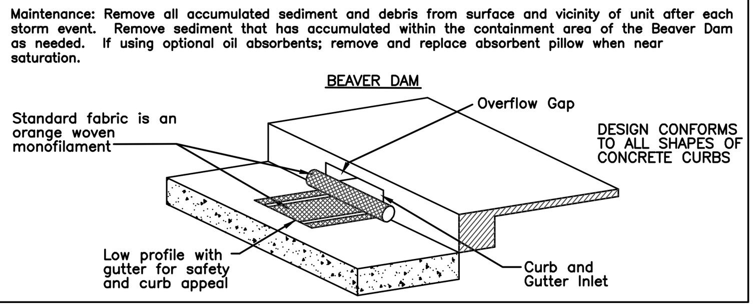

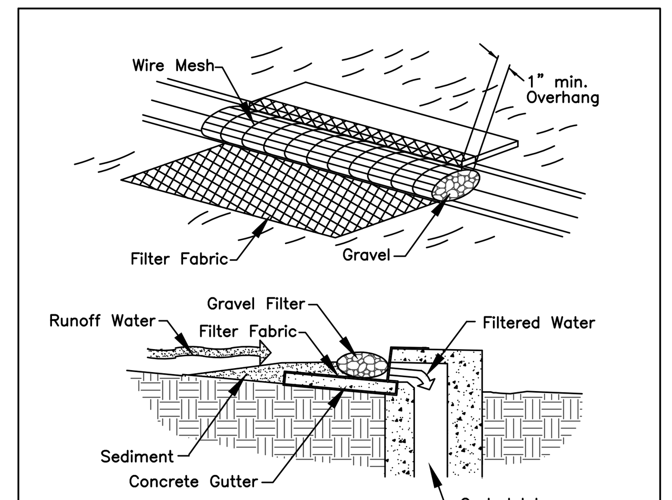

Specific Application

This method of inlet protection is applicable at curb inlets where ponding in front of the structure is not likely to cause inconvenience or damage to adjacent structures and unprotected areas.

17 WRAPPED GRATE, ROLLED GRAVEL CURB INLET FILTER

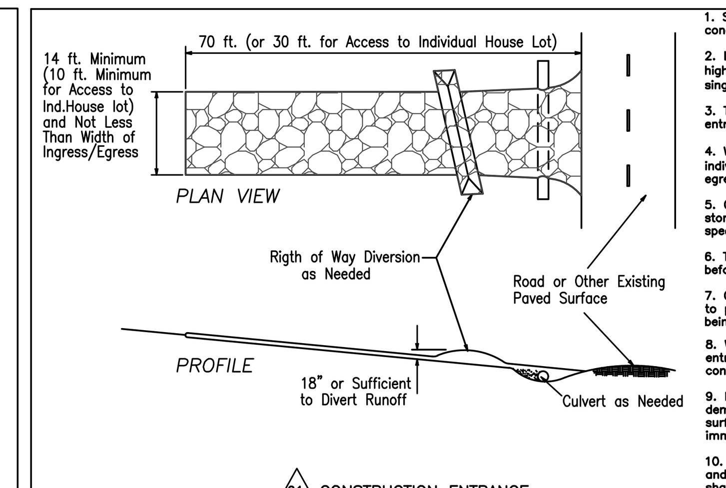

21 CONSTRUCTION ENTRANCE

1. Stone Size – ODOT #2 (1.5–2.5 inch) stone shall be used, or recycled concrete equivalent.
2. Length – The construction entrance shall be as long as required to stabilize high traffic areas but not less than 70 ft. (exception: apply 30 ft. minimum to single residence lots)
3. Thickness – The stone layer shall be at least 6 inches thick for light duty entrance or at least 10 inches for heavy duty use.
4. Width – The entrance shall be at least 14 ft. wide, (10 ft. wide for access to individual house lots) but not less than the full width at points where ingress or egress occurs.
5. Geotextile – A geotextile shall be laid over the entire area prior to placing stone. Is shall be composed of strong rot–proof polymeric fibers and meet the specifications of 7.4.1 of the OEPA Rainwater & Land Development Manual.
6. Timing – The construction entrance shall be installed as soon as is practicable before major grading activities.
7. Culvert – A pipe or culvert shall be constructed under the entrance if needed to prevent surface water flowing across the entrance or to prevent runoff from being directed out onto paved surfaces.
8. Water Bar – A water bar shall be constructed as part of the construction entrance if needed to prevent surface runoff from flowing the length of the construction entrance and out onto paved surfaces.
9. Maintenance – Top dressing of additional stone shall be applied as conditions demand. Mud spilled, dropped, washed or tracked onto public roads, or any surface where runoff is not checked by sediment controls, shall be removed immediately. Removal shall be accomplished by scraping or sweeping.
10. Construction entrances shall not be relied upon to remove mud from vehicles and prevent off–site tracking. Vehicles that enter and leave the construction site shall be restricted from muddy areas.
11. Removal – The entrance shall remain in place until the disturbed area is stabilized or replaced with a permanent roadway of entrance.

18 CHECK DAM DETAILS

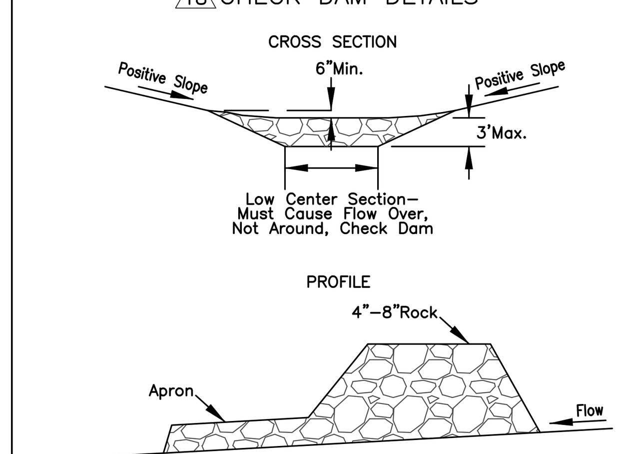

Check Dam Spacing

Dam Height (ft.)	Channel Slope < 5%	5–10%	10–15%	15–20%
1	65 ft.	30 ft.	20 ft.	15 ft.
2	130 ft.	65 ft.	40 ft.	30 ft.
3	200 ft.	100 ft.	65 ft.	50 ft.

CHECK DAMS
1. The check dam shall be constructed of 4 to 8 inch diameter stone, placed so that it completely covers the width of the channel.

2. The top of the check dam shall be constructed so that the center is approximately 6 inches lower than the outer edges so water will flow across the center and not around the ends.

3. The maximum height of the check dam at the center of the weir shall not exceed 3 ft.

4. Spacing between dams shall be as shown by the check dam spacing table.

DESCRIPTION
Check dams are small rock dams constructed in swales, grassed waterways or diversions. They reduce the velocity of concentrated flows, thereby reducing erosion within the swale or waterway. While this practice often traps some sediment, its trapping efficiency is extremely poor, thus, it should not be used as a sediment trapping practice.
CONDITIONS
This practice is limited to use in small open channels where it is necessary to slow the velocity of flows in order to prevent erosion. Applications include temporary swales which, because of their short length of service, are not practical to receive a nonerodible lining or swales which need protection during the establishment of grass linings, See specifications for rock check and gravel riffle for larger channels and streams.
DESIGN LIMITS
Check dams must not be relied upon to remove sediment from runoff flowing through a channel but rather are used to reduce erosion of the channel itself. However, innovative applications may produce effective ponding areas behind check dam or silt fence structures adequate to trap sediment from sites with very little slope and very little drainage area, less than 2 % slope and less than 2 ac. drainage area.
SPLASH APRON
Where check dams are expected to be in use for an extended period of time, a stone apron may be constructed immediately downstream of the check dam to prevent flows from undercutting the structure. The apron should be 6 inches thick and its length two times the height of the dam.

CONCRETE WASTE MANAGEMENT

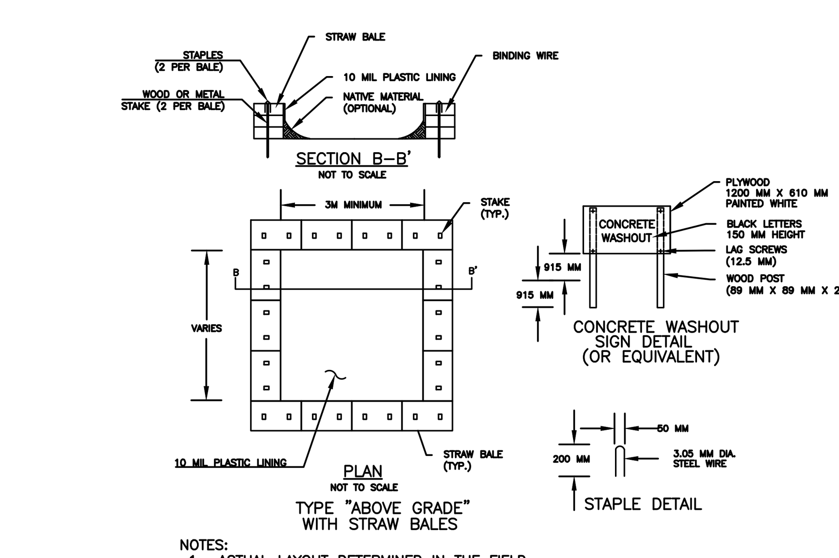

NOTES:
1. ACTUAL LAYOUT DETERMINED IN THE FIELD.
2. THE CONCRETE WASHOUT SIGN (SEE FIGURE ABOVE) SHALL BE INSTALLED WITHIN 10 M OF THE TEMPORARY CONCRETE WASHOUT FACILITY.
3. CONCRETE WASH WATER SHOULD NOT BE ALLOWED TO FLOW TO STREAMS, DITCHES, STORM DRAINS OR ANY OTHER WATER CONVEYANCE. A SUMP OF PIT WITH NO POTENTIAL FOR DISCHARGE SHALL BE CONSTRUCTED IF NEEDED TO CONTAIN CONCRETE WASH WATER.

22 CONCRETE WASHOUT AREA

EROSION CONTROL FOR INDIVIDUAL LOTS & SMALL SITES

WARNING! Extra measures may be needed if your site:
– Is within 300 feet of a stream or wetland
– Is within 1000 feet of a lake
– Is steep (slopes of 12% or more)
– Receives runoff from 10,000 sq. ft. or more of adjacent land
– Has more than an acre of disturbed ground

Typical Lawn Seed Mixtures

Grass	Sunny Site	Shady Site
Kentucky bluegrass	65%	15%
Fine fescue	20%	70%
Perennial ryegrass	15%	15%
Seeding rate (lb./1000 sq. ft.)	3–4	4–5

SAMPLE EROSION CONTROL PLAN FOR SITES OF ONE ACRE OR LESS

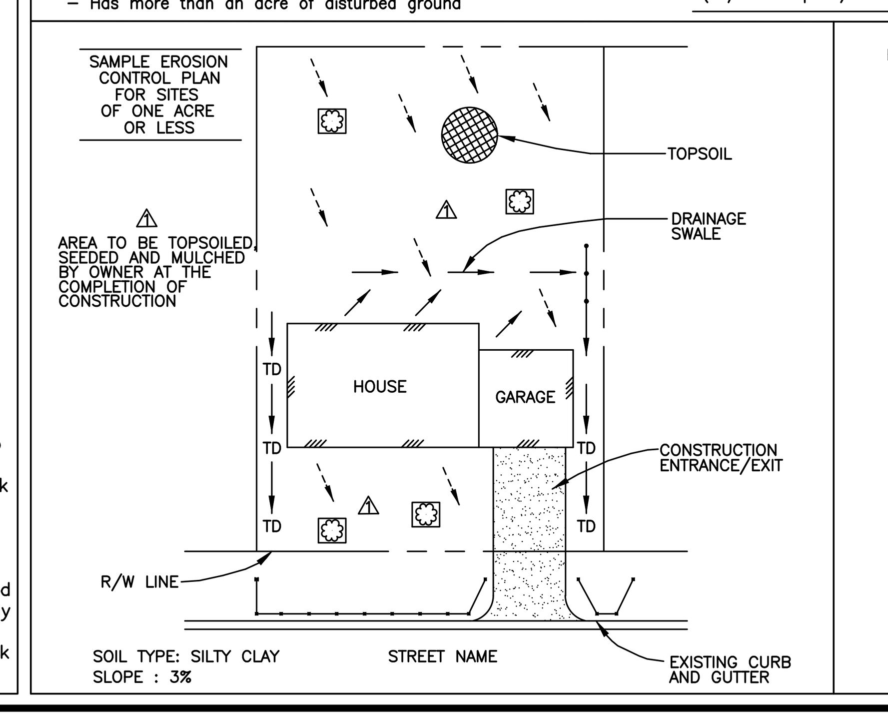

EROSION CONTROL PLAN LEGEND

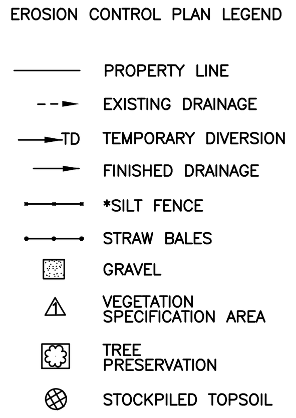

*Silt Fence to be positioned accordingly to intercept all sheet flow from upland drainage to prevent from leaving site.

THIS DOCUMENT AND ALL RELATED DETAIL DRAWINGS, SPECIFICATIONS, AND ELECTRONIC MEDIA PREPARED OR FURNISHED BY BAYER BECKER (BB), ARE INSTRUMENTS OF BB'S PROFESSIONAL SERVICE, AND IS THE EXCLUSIVE PROPERTY OF BB. NO DISCLOSURE, USE, REPRODUCTION, OR DUPLICATION IN WHOLE, OR IN PART, MAY BE MADE WITHOUT WRITTEN PERMISSION OF BB, AND IS DONE SO AT USER'S SOLE RISK. COPYRIGHT – ALL RIGHTS RESERVED.

Item	Revision Description	Date	Drwn:	Chk:

EROSION & SEDIMENT CONTROLS

bayer becker
www.bayerbecker.com
6900 Tylersville Road, Suite A
Mason, OH 45040 - 513.336.6600

Drawing: SOIL
Drawn by:
Checked By:
Issue Date: 3-4-2022
Sheet: 13/13